Collaboration, participation and non-participation: decisions about involvement in randomised controlled trials for clinicians and parents in two neonatal trials

London School of Hygiene & Tropical Medicine
LIBRARY
21 DEC 2005
RECEIVED

London School of Hygiene & Tropical Medicine
University of London

Ph.D. Thesis

2005

Claire Snowdon

UNIVERSITY OF LONDON

Abstract of Thesis

Author (full names)... Claire Snowdon.....

Title of thesis... Collaboration, participation and non-participation: decisions about involvement in randomised controlled trials for clinicians and parents in two neonatal trials

Degree.... Ph.D. .....

Background: The ethical basis of randomised controlled trials is equipoise, whether at the collective or individual level. Neonatal intensive care trials are therefore conducted in a context of clinical uncertainty as well as stress and trauma. The theoretical literature suggests that tensions exist in the trials situation between the aims of care and research.

Objectives: To improve understanding of decisions that clinicians and parents make about neonatal trial collaboration, participation and non-participation.

Methods: Semi-structured interviews were conducted with 30 neonatologists and 63 parents from 5 UK hospitals who were offered enrolment in the INNOVO and/or CANDA trials. Qualitative analysis was aided by ATLAS-ti.

Results: The neonatologists' interviews suggested an intermediate level of equipoise. A therapeutic orientation operated for the INNOVO Trial but not for the CANDA Trial. Neonatologists often did not connect trial participation and trial-related postmortem pathology studies. Most parents made very rapid decisions about trial participation. Perception of risk was independent of the trial under consideration but associated with a slower decision-making process. The 'therapeutic misconception' was present for parents in both trials. Many supported contributing to research. For some of the bereaved parents, this extended to contribution to trial-related pathology studies. Parents who declined the CANDA Trial saw risks in the trial situation.

Conclusions: Decisions were complex and multi-tiered. The boundaries between care and research were often unclear for neonatologists and parents. Clarification of the nature of decisions at the heart of clinical trials is needed, so that those associated with research might be willing collaborators and participants, fully cognisant of the activity in which they are engaged.

Acknowledgements

This thesis is the product of the support of many people. There is no doubt at all that it would not have been produced without the extraordinarily careful management of my supervisor and colleague, Diana Elbourne, who knew when to allow it to recede into a corner of my life and when to bring it to the fore. Her approach, from its inception has been to assume, whatever the obstacles, that it would come to fruition. I am grateful for her real and very practical support, for her enthusiasm for the material and the firm encouragement which has brought me to this point. I am also grateful to Jo Garcia, who has worked with me throughout this study. With Diana Elbourne, she developed earlier research linked to the ECMO Trial which provided the impetus and direction for the study represented here. Research funds were given by the Nuffield Foundation and at a critical juncture by the London School of Hygiene and Tropical Medicine.

The research itself was facilitated by many people. David Field supported the work with the INNOVO Trial and Alan Fenton first suggested that we might study the CANDA Trial. Keith Tomlin, Ann Truesdale and Sean Ainsworth have addressed many queries about the two trials. The trust of clinicians who were prepared to lay their practice and views open to scrutiny at a time of great media interest in their work was remarkable. The parents who explained deeply personal events are very much appreciated. Colleagues at the Centre for Family Research, especially Nina Hallowell and Oonagh Corrigan, have provided a stimulating environment in which to think through interesting issues and thorny problems. Sally Roberts has always been at hand in times of need. My advisory panel, Nina Hallowell, John Porter, Gillian Hundt and Bill Fulford, have been encouraging and supportive.

Friends, Ingrid Wilkins and Claire Shephard have been wonderful, providing childcare at crucial times. For several years my family has made certain sacrifices to allow me to conduct this research, especially in the extended interviewing periods. This has intensified in the last seven months. Thank you to John, Hugo, Lizzie and my parents for their forbearance of the disruption that this has brought and for their much appreciated help with day-to-day life which was fundamental to completion.

This is dedicated to my children

Statement of work

This thesis is draws upon a larger piece of research, the Study of Views of Participants in Perinatal Trials (SVPPT) which was developed in collaboration with Diana Elbourne and Jo Garcia. I was the primary researcher with responsibility for co-ordinating and conducting the research. This involved negotiations with clinicians; adapting the protocol to fit local requirements and making multiple research ethics committee applications. I co-ordinated recruitment of the sample of professionals and parents and carried out most of the interviews. The study was interrupted by two periods of maternity leave. At these times Laura Turville was employed to carry out one interview and Marion MacAllister to carry out 4 interviews with parents. Diana Elbourne also carried out one interview. The interview transcripts were prepared by a transcription service. I carried out most of the qualitative analysis of data for the study using the software package ATLAS-ti. This resulted in the publication of three papers and a book chapter all of which I prepared and submitted to colleagues for their comments (Snowdon et al 2004i, 2004ii, 2004iii, 2004iv). An additional paper was prepared with Jo Garcia taking the lead on the analysis whilst I wrote the literature review (Garcia et al 2004). For the thesis I have drawn upon that literature review but carried out my own qualitative analysis, developing different strands to those considered in the published paper. A complete list of co-authored papers and book chapters is supplied as Appendix A. Diana Elbourne has also acted as my thesis supervisor. In this capacity she has guided the production of this thesis. She has commented upon all drafts of chapters. Although I have drawn on material from SVPPT, I have not used text prepared by colleagues.

An advisory panel was set up for SVPPT consisting of Prof. David Field (neonatologist), Prof. Zarko Alfirevic (obstetrician), Prof.Ann Jacoby (sociologist), Dr Hazel McHaffie (ethicist), Mrs Sue Saunders (ECMO Trial parent) and Mrs Maggie Wigmore (ECMO Trial parent).

Signed [redacted] Date 21st July '05

Signed ..... Date.....

Table of Contents

Acknowledgements 3
Statement of work 4
Table of Contents 5
List of tables, figures and boxes 11
Tables 11
Figures 11
Boxes 11

Chapter 1 – Randomised Controlled Trials And The Gap Between Theory and Practice 13
The methodological dominance of the randomised controlled trial 13
The dominant approach to RCTs – the Theory of Broad Benefit 14
Benefits to society 14
Introduction of novel therapies 15
Assessment of established interventions 15
Appropriate use of resources 16
Benefits to individual trial participants 17
Beneficial effects of the trial situation 17
Possible access to potential benefits of novel therapies 17
Protection from potential risks of novel therapies 18
A gap between the Theory of Broad Benefit and practice 19
An alternative view – the Theory of Limited Benefit 21
RCTs primarily offer benefits to society 22
Trial collaborators may abrogate their duty of care 22
Patients are often unclear about the implications of participation 23
Difficulties at the intersection of care and research 24
Aims of this research 28

Chapter 2 –Tension in RCTs Past and Present 31
Part I - Early signs of tension: Austin Bradford Hill and the RCT 31
Part II – Tension in modern debates on the use of RCTs 33
Uncertainty as the basis of the RCT – the concept of equipoise 34
On whose opinion does equipoise rest? 34
When does equipoise exist? 37
Empirical evidence 38
Equipoise as the ethical rationale for randomisation 39
Randomisation as an indication of equipoise: a marker for the distinction between care and research 40
Part III - The special case of neonatal RCTs and associated pathology studies 42
Neonatal trials in critical settings 43
Professional responses to collaboration with neonatal RCTs 44
Parental views on participation in neonatal RCTs 45
Stress 45
Factors affecting decision-making 45
Parental preferences for making a decision 46

Standards of consent 47
Views of neonatal trial pathology studies 48
Professional views regarding perinatal post mortems 49
Parental views regarding perinatal post mortems 50
Neonatal trials - a challenging but appropriate area for research 51

Chapter 3 - Methodological issues for research on trial collaboration and participation 53
Part I - Areas of methodological concern 53
The impact of a focus on attitudinal barriers to accrual 54
The generation of hypothetical data 55
The treatment of trials as a collective 55
Part II - The rise and development of qualitative studies in relation to RCTS 56
Recognition of the importance of the microclimate of individual trials 57
Reflection on the part of trialists 57
An empirical focus on individual trials 59
Early use of qualitative methods 59
Qualitative research as an intervention 61
Qualitative research as a means to measure outcome 62
The methodological lessons learned 62
How these key lessons have in part guided the design and conduct of the research in this thesis is the subject of the following chapter. 63

Chapter 4 – The Current Study 64
Part I - Origins of the research 64
The ECMO qualitative studies - a developmental approach to researching participation in trials 64
Study 1 64
Study 2 65
Contemporaneous research - Study 3 67
Part II - The Study of Views of Participants in Perinatal Trials: an evolutionary approach to research 68
The plan for the study 68
Obstacles to progress and their impact upon the study 69
The unpredictable nature of clinical trials 69
Delays in securing research ethics committee approval 70
Failure of a proposed research method 70
Access to bereaved parents 71
Access to parents who declined to participate in a trial 72
Extension of the study 74
The final design of the study 75
Part III - Selection of material for the thesis – the structure of the substudy 77
Neonatologists and parents 77
The CANDA Trial 78
Circumstances of consent and the likely condition of the babies 79
The intervention 79
The course of the trial 80
The INNOVO Trial 80

The circumstances of consent and the condition of the babies 81
The intervention 81
The trial design 82
Part IV – The implementation of the research for this thesis 82
Methodological decisions 82
A qualitative approach 82
Focus and style of the interviews 83
Interviewing clinicians 84
Interviewing parents 84
A sensitive setting 84
Joint interviews – issues for data collection 85
Joint interviews – ethical issues 87
Data collection 88
The interviews with the neonatologists 88
Recruitment 88
Details of the interviews 88
Conduct of the interviews 90
The interviews with parents 90
Recruitment 90
Details of the interviews 91
Conduct of the interviews 92
Data analysis 93

Chapter 5 – The decisions that neonatologists make to collaborate with a trial..95
Organisation of the data 95
Level 1 - Individuals in principle 95
Advancing medical knowledge and improving patient care 96
A means to balance risks and benefits for populations and for individuals 100
Level 2 - Local collective collaboration in principle 103
The consultation process 104
The terms of collaboration 105
Level 3 - The local collective collaboration in practice 107
How autonomous are the decisions that the neonatologists make about trial collaboration? 107
Is involvement with trials optional or obligatory? 108
Level 4 - The individual in practice 112
Views of the CANDA Trial 112
The trial interventions 113
The impact of enrolment on parents 116
Views of the INNOVO Trial 119
The intervention 119
The use of INO - equipoise and therapeutic intent 121
INO as a potentially useful tool 122
INO as a highly desirable intervention 123
INO as a rescue therapy 124
Discussion 128

Chapter 6 – The decisions that doctors make about suspension of trial collaboration **131**
Part I - Personal ethical judgements 131
Part II - Evidence-based considerations 134
Part III - Clinical judgements; a focus on decisions over the use of INO within and without the INNOVO Trial 138
The approaches of different neonatal units 140
The views of the neonatologists 143
Conditions set by the trial 143
Strategic thinking about the implications of enrolment 145
Responses to the possible use of alternative vasodilators 147
Professional responsibility and the need for action 148
Discussion 150

Chapter 7 – The decisions that parents make to accept participation in the CANDA or INNOVO Trials **152**
The direction of inquiry 152
The neonatologists' concerns 153
Part I - Parental circumstances and the speed of decision-making 154
The background to parental decisions 154
Location and timing of discussion 158
Antenatal ward 158
Delivery room 158
NICU 158
Consent during active labour 160
Consent on a NICU 161
Speed of decision-making 162
How much time was available? 162
How much time was taken? 163
Part II – Parents' stated reasons for the pace of their decision 164
Reasons for a rapid decision 164
A background of concern for the baby 165
Fear 165
Hope 166
Reactions to staff 167
Trust 167
Irritation 171
Alienation 174
The significance of the trial 174
The CANDA Trial 175
The CANDA Trial did not add to their options 175
The CANDA Trial might improve the baby's condition 176
The CANDA Trial might save their baby's life 178
The INNOVO Trial 178
The INNOVO Trial might improve the baby's condition 179
There were no new options other than the INNOVO Trial 181
Importance attached to contributing to research 186
Reasons for a slower decision 191
Time was available 191

Parents wanted further discussion 192
The decision was difficult 192
Part III – The role of risk in decision making. 193
Quantitative and qualitative approaches to understanding the role of risk 193
Quantitative data 194
Comparison of perceptions of risk in relation to the two trials 194
Relationship between perception of risk and speed of decision making ... 194
Qualitative data 197
The CANDA Trial 197
The CANDA Trial involved no risk 198
The CANDA Trial involved risk 199
The INNOVO Trial 200
The INNOVO Trial involved no risk 200
The INNOVO Trial involved risk 201
Discussion 204

Chapter 8 – The decisions that parents make to decline trial participation 208
Refusals for the INNOVO and CANDA Trials 208
Four case studies 209
Cilla and Terry (Int.60) 209
Gillian and Kelvin (Int.48) 211
Shelley and Evan (Int.47) 215
Janine (Int.49) 217
Discussion 220

Chapter 9 –Attitudes of doctors and parents to trial-related perinatal post-mortem pathology studies 223
Perinatal post mortems - a second trial-related decision point for professionals and parents 223
Part I - PM rates in the two trials 224
Part II - Views of the neonatologists 226
Responsibility to parents and to the trial (care and research) 227
A sense of equal responsibility 227
A sense of divided responsibility 228
A prioritised sense of responsibility 228
The impact of the approach 230
PMs could be requested purely for trial purposes 230
Concerns over causing distress and the application of pressure 231
Part III - Views of the bereaved parents 233
Reaction to the offer of a PM 234
Appreciation of the connection between PM pathology studies and the trial 235
Discussion 237

Chapter 10 – Discussion and conclusions **241**
The value of this research 241
The contribution of this research to current debates 243
Equipoise and responsibility for the decision to collaborate 243
Clinician orientation in terms of care and research 246
Links with the theoretical literature 248
The influence of recruitment in extreme circumstances on the development of the therapeutic misconception 251
Suggestions for addressing some of these issues 254
Professional training 254
Alternative approaches to recruitment 256
Approaches to information giving 256
Payment of participants 259
Limitations of this research 259
Recommendations for future research 260

Conclusions **261**

Bibliography **265**

Appendices **284**

List of tables, figures and boxes

Tables

Table 1	Basic demographic details of the sample of neonatologists	88
Table 2	Neonatologists' career stage and links to the CANDA and INNOVO trials	89
Table 3	Basic details of the sample of parents	92
Table 4	Is involvement with trials optional or obligatory?	108
Table 5	Circumstances in which neonatologists would not approach parents of trial-eligible babies to discuss a trial	132
Table 6	Allocation, cross-over and the use of vasodilators in the INNOVO Trial	139
Table 7	Pseudonyms and interview details	155
Table 8	Parental circumstances around decision-making	157
Table 9	Location of decisions	158
Table 10	Time available for decision-making and time taken	163
Table 11	View of potential risks of the two trials	194
Table 12	Speed of decision-making in relation to views of potential risk	195
Table 13	Coding for each interview in terms of time available for decisions, time taken and perception of risk	196
Table 14	PM rates for the INNOVO Trial	225
Table 15	PM rates by centre	226
Table 16:	Pseudonyms, interview and PM details for the bereaved parents	233

Figures

Figure 1	Structure of the Study of Views of Participants' in Perinatal Trials	76
Figure 2:	Basic structure of the research	78

Boxes

Box 1	A collaborator's account.	27
Box 2	A participant's account	28
Box 3	Account of professional decision-making for the INNOVO Trial in difficult circumstances (Int.20 registrar)	127
Box 4	View of Local Principal Investigator for NICU B	140
Box 5	View of Local Principal Investigator for NICU A	140
Box 6	View of Local Principal Investigator for NICU D	141
Box 7	View of Local Principal Investigator for NICU C	142
Box 8	Consent during active labour (CANDA)	160

Box 9	Consent on the neonatal unit. Cheryl (Int.74 INNOVO)	161
Box 10	Account of consent when no other options exist - Erica and Howard (Int.80 INNOVO)	185
Box 11	Account of consent in relation to risk - Isobel and Roger (Int.65 INNOVO)	203
Box 12	Key points to have emerged from the interviews with the neonatologists	242
Box 13	Key points to have emerged from the interviews with the parents	243

Chapter 1 – Randomised Controlled Trials And The Gap Between Theory and Practice

The methodological dominance of the randomised controlled trial

There is no doubt that there is a huge degree of support for the use of the randomised controlled trial (RCT) around the world. Enormous numbers of trials are conducted, requiring the commitment of vast human and financial resources. Whole institutions, as well as many academic and medical departments, are given over to running trials and to trial-related methodological research. There are academic journals and societies dedicated to the RCT. Conferences on the subject abound. In the UK, government-sponsored funders, such as the Department of Health and the National Health Service Health Technology Assessment Programme make substantial investments in trials; the Medical Research Council (MRC) currently spends approximately £20 million per annum in their support. This figure is, however, dwarfed by the input from the pharmaceutical industry. As demands for evidence-based medicine grow, it is likely that the number of trials will continue to increase. The RCT has achieved what Berry has described as "a hallowed status" (Berry 1989).

The RCT is so widely used because it is capable, if well-conducted, of generating high quality scientific results. Randomisation, the defining feature of the RCT, is crucial in this respect. Random allocation of intervention groups was developed to address the issue of selection bias at trial entry. Proponents argue that it is the only means by which an observed effect may be attributed to an intervention (Chalmers et al 1989). Uncontrolled studies are less reliable as there is no comparison group, and even in controlled studies, if the groups are not assigned randomly, it cannot be stated with confidence that observed changes are due solely to an intervention rather than pre-existing inter-group differences. Results from clinical trials which have been randomised are said to be simply "more believable" (Pocock 1995). The

methodological advantages of the RCT have lead to its almost universal adoption as the scientific "gold standard" for assessment of effectiveness in clinical research[1].

The RCT is, however, more than an experimental tool. It is a scientific method which is applied in a human context. It is the concerns raised by this context which drive an extensive and wide-ranging debate within which a number of standpoints exist. The main justification for the use of the RCT is made via the dominant paradigm which shall from here on be termed the Theory of Broad Benefit. The main critique rests on what shall be termed the Theory of Limited Benefit. These two perspectives are both products of scientific, social, political and ethical reflection.

The dominant approach to RCTs – the Theory of Broad Benefit

If conditions of uncertainty over the most appropriate form of care prevail, the use of the RCT is widely thought to offer a number of benefits to both society and individuals (Chalmers 1986; Silverman 1987; Freedman 1987; Tobias and Souhami 1993; Grimmett & Sulmasy 1998; Emanuel et al 2000).

Benefits to society

Societal benefits are thought to accrue in the following ways:

- initial introduction of novel therapies within controlled studies (and non-adoption of therapies not found to be effective)
- assessment of established interventions
- appropriate use of resources

[1]Although this is the majority view, there are those who reject the idea of the RCT as the gold standard for research about effectiveness, or who argue that valid alternatives are not always given due consideration (McLeod 1999). Berry (1989) suggests that the methodological supremacy accorded to randomisation reflects received wisdom rather than a clearly thought out argument. He likens the situation to the story of the naked emperor's new clothes: "Only fools failed to see the emperor's new clothes. Nobody wants to be thought a fool, so everybody 'saw' them. Nearly everyone praises randomisation." Starzl (1985) argues that excluding other methods can lead to unnecessary research beyond a point where there might already be a convincing body of evidence. He describes this as "trialomania". Coulter (1991) argues that the RCT is fundamentally flawed as it involves aims which are essentially incompatible, that is to reduce the natural variability of individuals and to produce generalisable findings. Coming from the homeopathic tradition he views responses to a treatment as highly individual in nature; like Berry (1989) and Zajicek (1995), he argues that results for the average patient as assessed by the RCT are unlikely to hold true for individuals.

Introduction of novel therapies

The most obvious societal benefit of the RCTs links to the forces which drive the research in the first place, that is trial-based research may be used to bring about medical progress and innovation. An important example of the progress made as a result of clinical trials is the highly successful incremental advancements that have been made in the treatment of paediatric leukaemia, for which survival rates have greatly increased (Simone, 2003). In neonatal intensive care, there are a number of examples of successful therapies, such as surfactant and extra-corporeal membrane oxygenation (ECMO), whose introduction has directly affected the standards of care that can be offered.

Assessment of established interventions

Many interventions creep into long-term common usage without having been the subject of a clinical trial. This may be because the benefits seem so clear that a trial would not be necessary to demonstrate efficacy. Alscher (a contributor to a debate presented in Cook et al 2003) gives the impact of appendectomy for acute appendicitis, the polio vaccine, and insulin for diabetes as examples. McLeod, however, draws attention to the fact that "even therapies that were once accepted without question are being evaluated in RCTs" (McLeod 1999); he uses as an example a trial comparing appendectomy to antibiotic therapy alone (Eriksson & Granstrom 1995[2]). In other instances, there can be a pressing need for, or a great interest in, an intervention, which is then rapidly adopted as routine practice, as was the case with laparoscopic cholecystectomy (Plaiser et al 1994; McLeod, 1999) and extra-corporeal shock-wave lithotripsy for kidney stones (Dudley, 1986). When a shift in practice has already occurred it can be difficult, if not impossible to conduct a trial. Lumley and colleagues described how a trial to determine the best method of delivery for very low birthweight infants became impossible as obstetric staff were "irrevocably convinced"

[2] The results of this trial indicated that "antibiotic treatment in patients with acute appendicitis was as effective as surgery. The patients had less pain and required less analgesia, but the recurrence rate was high" (Eriksson & Granstrom, 1995).

of the benefit of caesarean sections for these infants and had widely adopted this as the norm (Lumley et al 1985)[3].

Although RCTs which assess existing approaches to care can raise some difficulties (unless they are included as best standard care as a comparison to a novel approach), they can provide important evidence to support or to suggest the discontinuation of interventions already in use. For instance, the use of hyperbaric oxygen for alleviation of symptoms of multiple sclerosis was largely[4] discontinued after it was eventually shown to be ineffective after years of debate over its use (Barnes et al 1987). Some interventions which have entered common usage without evaluation as they at first appeared innocuous, have subsequently been shown to have disastrous consequences. This was the case with the instigation of a small rise in body temperature for preterm babies which was eventually recognised to have increased mortality rates (Silverman 1980). There are also many instances of untrialed interventions which initially seemed to be efficacious but for which the negative consequences were later revealed through clinical trials: increased levels of supplemental oxygen caused blindness in premature babies, there was a risk of cancer for the children of women who took diethylstilbestrol during pregnancy, and the impact of anti-arrhythmic drugs given to cardiac patients resulted in the deaths of approximately 50,000 individuals (Silverman, 2004). Roberts and colleagues recently demonstrated an unexpected increased level of mortality associated with the common practice of administering corticosteroids for head-injury as a prophylaxis against infection (Roberts et al 2004).

Appropriate use of resources

Where RCTs and their ancilliary studies[5] provide clear evidence of the level of effectiveness of an intervention, and an understanding of associated comparative

---

[3] A review of records showed that those who delivered vaginally were of significantly lower gestation than those delivered by caesarean section. Vaginal delivery was more likely to be used in cases where the particularly early gestation meant that the babies were not expected to survive.

[4] Wynne (1989) carried out a study to explore why a proportion patients continued to fund their own use of hyperbaric oxygen after the trial in which they had participated had demonstrated no effect on their multiple sclerosis symptoms. This research raises a rarely considered issue about who defines effectiveness and how benefit is measured. Wynne concludes "at least in the case of this therapy and this condition, the assumptions inherent in the trial method, and its concept of genuine therapeutic benefit, structures the conclusions of the trial in a way that is profoundly at variance with the participants' own methodological assumptions and concept of benefit."

[5] RCTs often include economic assessments, allowing the costs of interventions and their sequelae to be considered alongside clinical outcomes.

costs, this can allow often scarce human and financial resources to be used in the most appropriate ways.

Benefits to individual trial participants

For those who participate in RCTs, a number of advantages have been suggested. They are:

- beneficial effects of the trial situation
- possible access to potential benefits of novel therapies
- protection from potential risks of novel therapies.

Beneficial effects of the trial situation

Several studies have indicated that there may be some measurable benefits of trial participation itself, in that trial participants can have better outcomes than non-participants regardless of allocation (Reiser & Warner 1985; Schmidt & Gillie 1999). This phenomenon has been termed the "inclusion benefit" in clinical trials (Lantos 1999). Some attribute this to a higher standard of care in a trial context (Skrutkowska & Weijer 1997). This may be because the management of care in all trial arms can be highly controlled, offering what is essentially a management plan for each participant, specifying for instance drug regimes or decision trees according to allocation. Furthermore, trials can be based on "optimal management advice [which is] incorporated in the protocols from leading ... experts" (Yates 2003). Reiser and Warner suggested that benefits may accrue as trial participants can be particularly motivated and compliant with their regime, in response to being 'selected' for a 'special trial group' (Reiser & Warner 1985).

Possible access to potential benefits of novel therapies

It is an ethical prerequisite that trials should offer interventions which, based on the evidence at the outset, are thought to be similar in their effects (the null hypothesis).

Clear evidence of superiority of an intervention would render allocation to the inferior approach unethical. It is, however, the case that the fact that a trial is taking place implies that a novel therapy is, at the very least, promising (Joffe & Weeks 2002). The possibility of allocation to an experimental arm may then be seen as offering an opportunity to access a *potentially* beneficial intervention (Snowdon et al 1997). As the benefits and risks for all arms of the trials are thought to be equivalent at the point of recruitment, the different approaches available in a trial have been described as offering "an equally good bet prospectively" (Edwards et al 1998).

Protection from potential risks of novel therapies

Trial participation is also thought to offer participants a degree of protection. Rather than being exposed to "uncontrolled experimentation", (Chalmers 1986), the informal and largely unaccountable process of everyday clinical encounters, whereby caregivers seek to find an effective treatment for a patient without the benefit of an evidence base to guide them (Silverman 1997), the administration of interventions for trial participants is subject to guidelines laid down in the trial protocol. Trial participants often receive a higher level of monitoring than they would otherwise expect. This approach is said to reduce the risks for patients in potentially vulnerable situations (Chalmers 1983).

Chalmers argues that for all of these various reasons, RCTS "maximize benefit and minimize harm" (Chalmers 1986), that the degree of protection offered through administration of an intervention in a trial, with close monitoring of progress and side effects, is necessary because "all of our interventions in people's lives are two-edged swords" (Chalmers 1983). Given the potential for societal and personal benefit through RCT participation, and the risks, again to society and individuals, which are inherent in a context of uncertainty, it has been suggested that it is unethical for clinicians *not* to offer to enrol a patient to an appropriate trial protocol (Segelov et al 1992). Baum argues that if the public were educated about clinical uncertainty and RCTs, they would expect or even demand trial entry (Baum 1993).

A gap between the Theory of Broad Benefit and practice

Although there is clear national and international support for RCTs, and the theory that they are broadly beneficial is widely-articulated, there is a wealth of evidence to indicate that many professionals and patients at the "coalface" (Sackett 2000) do not necessarily see trials in the same way. RCTs, regardless of specialty and location, are in fact beset with recruitment problems. Siminoff and colleagues comment:

> Despite the clamor by the public to more quickly develop new and better drugs, the first stumbling block to the timely accrual and completion of clinical trials is the reluctance of physicians to offer patients a chance to participate in a trial. The second major barrier is the low acceptance rate of patients when a trial is offered (Siminoff et al 2000).

Despite the argument for the benefits of trials put forward by commentators such as Chalmers, Segelov and Baum, many professionals do not enrol the majority of their trial-eligible adult patients into trials, and the majority of patients do not demand trial entry. It is very common for trials to experience serious difficulties achieving target sample sizes (Gotay 1991; Gates et al 2004). It is estimated that for oncology trials only 10% of physicians enter 80% of trial participants (Cohen 2003), and that only two to three per cent of trial-eligible patient are actually enrolled into a trial (Lara et al 2001). The large disparity between the number of health professionals who indicate an intention to enrol patients into a trial, and the proportion that actually does so has been frequently reported (Baines 1984; Lumley et al 1995; Tognoni et al 1991). Prout comments:

> The common thread that runs through recruitment experiences is first and foremost the truth of Muench's Third Law, namely, that the number of patients promised for a clinical trial must be divided by a factor of at least 10 (Prout 1979).

There can be major consequences of poor levels of recruitment. A prolonged recruitment period may render the results obsolete by another trial. There can be a reduction in both generalizability of data and statistical power (Ashery & McAuliffe 1992). Trials affected in this way cannot answer the questions they were meant to address and potentially useful trials can be derailed (Lumley et al 1985; Tognoni et al 1991; Plaiser et al 1994; Hunt et al 2001; Ehrlich et al 2002).

The factors contributing to lower than anticipated recruitment are not simple to disentangle. There has been a proliferation of research assessing the views of professionals, patients and the public, which predominantly focuses on their attitudes as obstacles to recruitment. A number of reviews of this literature exist (Hunninghake et al 1987; Ross et al 1999; Cox & McGarry 2003). The review by Ross and colleagues assesses 78 studies, a figure which has increased substantially in the five years since publication. Over and above practical constraints and protocol demands, important attitudinal barriers for professionals were identified as concerns for the impact of offering a trial on their relationship with patients, on patient wellbeing and on professional autonomy. For patients it was shown that trials can be difficult if they run counter to treatment preferences, if they raise anxiety over the background of uncertainty and if the consent process causes concern.

The common difficulties with accrual are, however, only one consequence of a complex mix of interrelated factors which shape the management and course of a trial. Where professionals find the particular terms of a particular trial to be difficult, this can result not only in poor overall rates of recruitment, but also selective recruitment (Lumley et al 1985; Taylor et al 1984; Kornblith et al 2002), disregard for allocation and the requirements of a protocol (Klein et al 1995) and subversion of randomisation (Oakley 1992; Schultz 1995a, 1995b). Where patients find the terms of a trial difficult, their responses can also have a dramatic impact upon the success or failure of a trial. They may quite simply decline to participate if a trial appears to be risky (Hutton et al 1990), to involve undesirable interventions (Plaiser et al 1994; van der Windt et al 2000) or to place restrictions on access to a desirable intervention (Mcleod et al 2004). They may enrol onto a trial but be non-compliant with the protocol (Williams et al 1980), or may accept randomisation but decline subsequent allocation to an arm other than their preferred intervention (Abramsky & Rodeck 1991).

These problems were brought into sharp focus by the particularly pro-active stance taken by some patients who were recruited to placebo-controlled HIV-AIDS trials in the 1980s. In a bleak situation, AZT appeared to offer the only hope for those affected by HIV-AIDS and the then experimental drug was not available outside trials. Some gave false information in order to enrol on a trial in the hope of accessing AZT, some had their study medication analysed, dropping out if they discovered that they had

been allocated a placebo, and some shared trial medication with other participants to ensure the intake of at least some of the active drug (Merrigan 1990). These actions seriously undermined the validity of the trials and so had consequences for fellow trial participants and future patients. They did, however, make it very clear that for an influential number of individuals, the strictures of these protocols were counter to what they felt was their own interests. These actions brought about ethical and methodological reflection by the trials community. The trials were redesigned to take account of patient preferences (Institute of Medical Ethics Working Party on the Ethical Implications of AIDS, 1992) and AZT was made available outside trials on compassionate grounds (Arras 1990; Mirken 1995).

Yates (2003) argues that poor rates of collaboration and participation are evidence of "a disconnect [which] exists between the collective desire for [medical] progress and professional and public acceptance of participation in clinical trials". Schultz argues that one of the reasons for non-co-operation is a disparity between the conditions which are set in order to run trials effectively, and the needs of the professionals and patients at the heart of the trials situation, an argument clearly reflected in the difficulties arising in connection with the HIV-AIDS trials described above. He states that "RCTs provide the gold standard, but they are also anathema to the human spirit" (Schultz 1995b).

An alternative view – the Theory of Limited Benefit

Given the dominance of the Theory of Broad Benefit, alongside the almost universal phenomenon of recruitment difficulties, one might expect logically that there would be less concern when individuals do choose to collaborate or participate in RCTs. In fact the argument that trials are appropriate for medical science but problematic for individuals is commonly raised in the theoretical and empirical literature; Hilden and Gammelgaard (2002) refer to "the eternal theme" of RCTs giving rise to ethical dilemmas. This does not sit comfortably with the Theory of Broad Benefit in which the central tenet is that trials offer protection for patients and an ethical framework to guide professionals. Whilst the broad benefit theorists see RCTs as the means to harmonise the needs of different parties, the limited benefit theorists largely focus on competition between social and scientific needs and the needs of individual patients.

According to the Theory of Limited Benefit, the RCT involves compromises for three main reasons, namely:

- trials primarily offer benefits to society
- trial collaborators may abrogate their duty of care
- patients are often unclear about the implications of participation

RCTs primarily offer benefits to society

According to the Theory of Limited Benefit, the advantages of research are tipped in favour of society rather than the individual patients who act as participants. Several authors have suggested that instead of protecting patients, trial enrolment trades their well-being for that of patients of the future (Barber 1976; Fost 1979; Schafer 1982) and that for trials where mortality is an outcome measure, it can constitute a sacrifice of some of the patients who are allocated to what turns out to be the less effective intervention (Thornton 1993, Yao & Wei 1996). In this approach the needs of society and the needs of individuals are considered to be in direct competition. This conflicts with the World Medical Association Declaration of Helsinki which states that "concern for the interests of the subject must always prevail over the interests of science and society" (World Medical Association, 2001).

Trial collaborators may abrogate their duty of care

Fried argued that clinicians have a duty to provide their patients with "personal care" (Fried 1974). Several commentators have expressed concern that clinicians who collaborate in RCTs may find themselves compromising this important principle. Schafer states that "the possibility of conflict is an ever present danger" (Schafer 1982) and Kodish refers to such a split in loyalties between research and care as "the most vexing ethical issue raised by RCTs" (Kodish 1991). Those who recruit to trials can be seen as failing to act in the best interest of their individual patients and reneging on their professional duties (Hellman1979). Kodish states that a doctor is obliged to "give his or her best advice, indicating not only that which he or she is sure of, but also those things that he or she thinks probable, likely or reasonable" and to

"act in regard to the patient only as he or she perceives the patient's best interests with no conflicting responsibilities (Kodish 1982).

If trial entry is offered, this requires a clinician to describe the prevailing and their personal state of uncertainty over the most appropriate treatment, which some authors do not perceive as constituting "best advice" (Appelbaum et al 1987). Appelbaum and colleagues argue that the use of randomisation to different inflexible treatment arms of a trial can constitute a compromise in care. Trials can make demands on participants which would not be required of patients. Adjunctive medication such as sleeping pills or anti-depressants which may be important to patient well-being, may not be permitted according to some protocols "not because they are harmful in conjunction with ... the experimental treatment but precisely because they may be helpful and thus create confusion about the source of any positive responses observed" (Lidz et al 2004). Truog argues that there is a fundamental difference between offering trial entry to patients in the context of routine health care versus in potentially life-saving situations where it involves `unacceptable compromises': "In such a setting patients want to believe that their physician is entirely devoted to pursuing their best interest, without any conflict of loyalty" (Truog 1993).

This is borne out in the account of Hazel Thornton who was offered participation in the UK Ductal Carcinoma *In Situ* (DCIS) Trial after diagnosis of early breast cancer. She found the discussion about research particularly difficult in the context of her illness and her faith in her doctor was shaken: "It suddenly seemed that my belief that the physician's primary concern should be for me was ill-founded" (Thornton 1994).

Patients are often unclear about the implications of participation

It has been shown that there are inherent difficulties with informed consent processes and that trial participants are often unclear about important aspects of the research for which they have given their consent. The principle of informed consent, "the bedrock ...of protection of human research subjects" (Kraybill, 2004), holds that the decisions of those who agree to participate in biomedical research, should be free, informed,

autonomous and voluntary (Beauchamp & Childress 1994). Such clarity can, however, be difficult to achieve.

The information given to potential participants is intended to promote a clearer understanding but it may engender confusion and distress (Brewin 1982). Ingelfinger argues that information given to potential trial participants can be too complicated, and that without a training in medicine is unlikely to be understood (Ingelfinger 1979). If the information is not understood by those agreeing to participate in a trial, the standard of consent is inadequate and affords little of the intended protection to any of the parties involved. Even where information is less complicated, the context of illness which prevails in many trial situations, may not be conducive to clear assimilation and processing of information. Consent which is given in circumstances where individuals are likely to find it difficult, if not impossible to process and retain the necessary information to be said to be 'informed' has been described as "technical" (Kestin 1998) and "symbolic" (Horng et al 2002).

Difficulties at the intersection of care and research

It is recognised within the Theory of Broad Benefit and the Theory of Limited Benefit, that trials bring together care and research, two fields of activity each with their own tensions, stressors, dilemmas and regulations. The area of intersection is difficult ethical territory.

Care is primarily based on the needs of individual patients. It involves expectations based on familiar rules and patterns of engagement between patients and therapists. Although the world is changing and patients increasingly expect and are expected to take an active role in decisions about their care (Coulter 1997; McNutt 2004), Corrigan argues that for both parties, when faced with the question of trial enrolment, "pre-existing norms and values ... shape their expectations and drive their behaviour" (Corrigan 2003). Patient expectations that the medical professional can offer effective treatment to individuals can be high (Williams et al, 1995; Bryan-Brown & Dracup, 1996; Anon, 2000; Bell et al, 2002; McKinley et al 2002).

Research is intended to improve standards of care and to add to knowledge for the patients and society of the future. It does not have *treatment* of the individuals who act as research participants as a primary aim. Research using RCTs involves a shift away from personal care towards a system in which interventions are allotted randomly and individual variability is largely removed from the equation. To preserve the validity of research, trials can involve certain sacrifices – forgoing existing medication and undergoing tests and procedures such as the "invasive and uncomfortable" angiogram required of Lapsley, a doctor who described his involvement with a clinical trial (Lapsley 2004). Other procedures, such as the close monitoring which is valued according to the Theory of Broad Benefit, may be demanding for patients in certain circumstances, and may have iatrogenic effects. Some of the nursing staff involved with a cancer trial who were interviewed by this author for another study, expressed concern that patients who felt well, but whose tumours were advancing inexorably, were required to have additional tests for the trial which could reveal their progression to them at an earlier stage than would otherwise occur (Snowdon et al for the STEPS Group, unpublished).

Although the distinctions between care and research appear clear, when the two activities intersect, the borderland between them can, in practice, be hazy. In the most extreme case, they can be overlayered to a point where they are indistinguishable, with individuals being unaware that they have taken part in a trial (Snowdon et al 1997). Such difficulties may be due to prior expectations, as suggested by Corrigan, which interfere with the ability to modify perceptions of the altered stakes and ground-rules. It may be due to the need to care and be cared for. The offer of enrolment in a trial by a health professional with whom a patient is already familiar, such as a general practitioner, a professional who treats a chronic condition or even one who has recently initiated a caregiving relationship in an acute situation, may serve to further obscure essential differences. Collaboration and participation may go ahead precisely because any potential clash in research and personal aims, such as risks, or the implications of a shift in professional roles, are masked.

A lack of clarity on the distinction between the aims of research and care has been termed "the therapeutic misconception" (Appelbaum et al 1982) and is thought to constitute a major threat to the validity of informed consent for RCTs (Appelbaum et

al 1987)[6]. It has recently been shown to be a widespread phenomenon amongst patients (Litz et al 2004), and has also been identified amongst professionals by Joffe & Weeks (2002) who quote the National Bioethics Advisory Commission to clarify an important area in which misconceptions can arise:

> It is not a misconception to believe that participants will receive good clinical care during research. But it is a misconception to believe that the purpose of clinical trials is to administer treatment rather than to conduct research National Bioethics Advisory Commission 2001).

This clarification however, contains within it some of the subtlety of the distinction which can be so difficult to grasp. Here a difference lies within the terms "care" which is offered in the context of a therapeutic trial, and "treatment", which is not. It has been argued that in order to make such a distinction clearer the terms "treatment" and "patient" should not be used with reference to trials (Miller et al 1998).

The whole nature of therapeutic trials is that they set out to assess an intervention in a care context and, unlike phase 1 trials, where only a very small proportion of participants are likely to experience a clinical improvement, the possibility of benefit to individuals is higher. It would seem likely that this possibility of benefit, whether an aim or a side-effect, is at the heart of the intersection and so at the heart of some of the confusion over aims and roles. Given the almost ingrained identities of caregivers and patients, it may well be that it is almost impossible to keep the differences between care and research at the forefront of the minds of all parties. Can doctors faced with sick patients strip themselves of their essential 'doctorness'? Can patients who are ill and who seek a cure stop being patients?

The difficulties which arise at the intersection of care and research, and a number of other issues which have been touched upon in this chapter, are reflected in extracts from two accounts of trial processes, one written by a clinical collaborator (Box 1) and the other by a trial participant (Box 2). These two accounts give an indication of the value and importance of considering trials from more than one angle.

---

[6] The Therapeutic Misconception is considered further in Chapter 2

Dobkin describes how, in the course of a double blind trial of ticlopidine to prevent stroke (Canadian American Ticlopidine Study or CATS), he found it difficult to confront his patients with the uncertainty which surrounded treatment for their condition.

My admissions of uncertainty about the available remedies, and my willingness to leave the decision about their treatment to a computer's random choosing, simply compounded their anxiety about being sick. They would look at me bleakly, unable to reach a decision.

He felt personally responsible for those that he had enrolled in the trial. One of the trial participants in his care developed leukopeania, a potentially dangerous drop in white blood cell count and her trial drugs (ticlopidine or placebo) were quickly discontinued. Her white cell count rose after a week:

I could stop my restless fretting. But I was left with some gnawing doubts about my participation in the trials. Should I risk keeping my patients in the experiments and continue asking others to enrol?

Later came the news that a patient whose family had been against enrolment in the trial, had died. Dobkin wondered *'Had I now poisoned two people?'* Discussing the trial with potential participants became very difficult; split in his loyalties to patients and to the trial he felt like a *'double agent'*. He decided to unblind himself to the allocation and end his collaboration if the deceased participant had received ticlopidine. He felt anticipatory concern at faceing the patient's family doctor, his 'angry' wife and daughters. The patient had in fact received placebo: *'I smiled with relief and my guilt dissipated'*. He continued to feel anxious over the potential for *'unrecognised harm'* throughout the remaining five years of the trial. From his description of the collaborators' meeting to announce the trial results, this was a common reaction: *'You could hear the sighs of relief in the audience ... We had done no harm'*.

Dobkin, (1990)

Box 1. A collaborator's account

Rabinovitch consented to a trial which aimed to refine the use of a chemotherapeutic agent to prevent recurrence of breast cancer. She commented that she had "*blithely agreed to join*" this trial.

> *When Dr O, the oncologist, asked if I'd join an experiment, I said yes immediately. ... I heard "trial", and thought, good, anything that turns this into something more than being ill. Anthony is very anxious - what if the trial compromises my treatment? ... Dr O is keen to recruit me to the trial - in another conversation he says, with some irritation, that all patients should be in trials, so answers would be found faster - but he adds that if, at any stage, the team ... decide I need a different kind of treatment, they'll remove me from the regime.*

It was only when Rabinovitch embarked upon the trial regime that she appreciated that there were gaps in her understanding of the agreement that she had entered into.

> *I am lying rigid because I didn't think to ask the one question that might have made me think twice. To join the trial, the biopsy I've already had is not enough. Trial HQ, over in the States, needs more bits of my tumour. Dr O tells me this, but definitely uses the word "biopsy", singular. So here I am, flat on Dr K's couch. Softly, she chats away, filling cold silences. And, "I'll be doing the biopsies under local." "How many biopsies?" I'm on my back, in a gown that gapes open, and I'm trying to sound assertive. "Three," she says.*

Her description of the preparation for the biopsies suggests a time of anxiety and discomfort for trial staff as well as for Rabinovitch. An attempt to check her understanding of the trial was made, but in an anxious and stressed state she did not wish to engage in any further discussion.

> *Dr O's research nurse is in the room too. "Do you understand about the trial?" she asks me, in a voice that reaches my now hyper-anxious ears as extraordinarily patronising. "Yes," I say. "Has it been explained to you?" "Yes." I'm abrupt, and struggling to sit up.... Dr K takes over, her gentle stream of information more frenetic as she sees the pain on my face. "I can't put local anaesthetic right into the tumour," she tells me. "I don't want to know that, I don't want to know that," I say. Under her breath she mutters: "Why ever couldn't they use the original sample?"*

The trial-related biopsies were extremely difficult. Rabinovitch ends her account with an image of a trial participant whose involvement in research is far from participatory.

> When the three *test tubes have been placed in a refrigerated box, I sign the trial papers, have a further mammogram and crumple to the floor. The nurse brings tea, and the information that Dr K will be along. But I stand up and leave* the hospital. *It feels like the first bit of control I take over this illness, an iota of defiance against these passages of initiation into the Amazons. I don't, you see, want to be this brave.*
>
> Rabinovitch, 2004

Box 2. A participant's account

Aims of this research

The conduct of RCTs is very clearly a challenging area of medicine. Some inherent challenges, such as disentangling paternalism from consent processes, have emerged as clinical research, like many other aspects of 20th and 21st century medicine, has undergone dramatic changes. Other challenges, such as the impulse of clinicians to influence or to circumvent allocation, and selective forms of recruitment (Britton et al 1999) were clear from the first use of randomisation and have persisted over time

(Oakley 1982, Klein 1995, Shultz 1995a). It is evident that there is a tension between the drive to provide sound evidence within an ethical framework, and the impulse to realign the research situation with the more familiar terms of provision of care. It is likely that this tension permeates thinking about research and care in more varied and more subtle ways, for both professional collaborators and patient participants.

It is this tension, a pull between the drive to find a solution to a clinical problem, and to find a solution for individual patients, which provides both the backdrop for this research and the impetus for the main line of inquiry and for the selection of material for this thesis. It is my contention that all parties involved in discussion of the possibility of joining a trial are subject to this tension, and that it will impact upon their attitudes and experiences in a number of more, and less, obvious ways. One aim of the study is to gain an understanding of the relevance of this tension to the nature of the decisions that professionals and parents make about trial collaboration, participation and non-participation, to understand their priorities and the forces that shape and drive their choices. This is done not through a direct series of pre-defined questions but by examining the ways that people talk about, in this instance, neonatal trials and the decisions they make, in relation to the context of care and research. Analysis of their perceptions of trials and the terms and conditions that trials create can help to tease out the ways in which some of the complexities and subtleties of the transformed care/research setting are perceived, and will shed light upon the inherent tensions at the heart of many of their experiences. A second aim extends the focus from the decision-making process for enrolment in a neonatal trial to consideration of decisions around trial-related post mortem studies, with discussion of how this relates to earlier choices about involvement in a trial

Although attitudinal literature is available, it is my view that at present there is no research which adequately explores the *experiential* element of *both* collaborators and participants/non-participants, treating them as dyadic contributors to a complicated process, and giving equal weight to understanding the ways in which they affect and are affected by the trials process.

Outline of this thesis

This thesis reports an in-depth exploration of the views of neonatologists and parents associated with one or both of two neonatal trials. It is organised to illuminate some of the ways in which tensions are raised, resolved or remain irresolute. Chapter 2 presents the background to the study, briefly describing the history of the RCT as a scientific method and the early emergence of some of the areas of difficulty which persist today. More recent theories on the ethical value of trials, and some implications and consequences of their use are also described, along with some of the relevant empirical literature regarding aspects of trial collaboration and participation. The rationale for a focus on neonatal trials is put forward in this chapter. Chapter 3 draws upon some of the empirical work which is already available in this setting and charts the rise of qualitative research in relation to trials. Chapter 4 introduces the study itself in terms of the research history, the design of the study (including a critique of the methods often used in the existing literature), and implementation (recruitment, data collection and analysis). The results of the study are presented in Chapters 5 to 9. The data reported in these chapters are organised to highlight comparisons between the accounts of neonatologists (Chapters 5 and 6) and parents (Chapters 7 and 8), and across two time points in the course of involvement in a trial; the point of initial decision-making about involvement in a trial and a later point of decision-making about involvement in trial-related post mortem studies (Chapters 5/6/7/8 and 9). The results and the broader implications of the study are discussed in Chapter 10 along with recommendations for future research.

Chapter 2 –Tension in RCTs Past and Present

Although the Theory of Broad Benefit is the dominant trials-related paradigm, the Theory of Limited Benefit is a strong counter-current in the debate. An examination of the history of the use of the RCT indicates that this has been so from almost the inception of clinical trials. The tension between the two was made evident in the early trials which were met with suspicion and resistance. This tension has been sustained over time and continues to shape theoretical dialogue as well as discussions on the legitimacy and ethical basis of individual trials, and the appropriateness of trials for individual patients. This chapter focuses on this theme of tension, describing its early emergence and its development into more recent debates on equipoise and the use of randomisation.

Part I - Early signs of tension: Austin Bradford Hill and the RCT

Bradford Hill was a key figure in stimulating intellectual and methodological change and was instrumental in shaping the progress of medical research. Silverman and Chalmers quote newspaper descriptions of Bradford Hill as a "relentless statistician" and as having "perhaps the most remarkable career in medicine this century" (Silverman & Chalmers 1992). Doll saw him as having "more influence on the past 50 years of medical science than many winners of the Nobel prize for medicine" and describes how he urged researchers always to consider carefully the "the fundamental question" of cause and effect: "is there any other way of explaining the set of facts before us; is there any other answer equally, or more, likely than cause and effect?"(Hill 1966 cited in Doll 1992)

In the early 20th century great strides were made in the development of experimental methods (see Silverman 1980, Pocock 1985 for reviews). Pocock highlights key stages in this process. An early trial was published in 1898 by Fibiger involving alternate assignment of patients to experimental and control groups. In 1927 Ferguson and colleagues reported a vaccine study involving single blind methods whereby

patients were unaware of the administration of active drugs or placebo. He describes a trial in 1941, published by Abraham and colleagues, which demonstrated the effectiveness of penicillin on war wound infections. This trial raised important issues for the surgeons involved. Concern about those with severe wounds inhibited surgeons from withholding potentially beneficial penicillin. This biased the trial as the experimental group included a disproportionate number of seriously ill patients. Penicillin had such a dramatic effect, however, that bias was of less importance in this particular setting. A drug with more subtle effects may have appeared ineffective because of higher mortality rates in the experimental arm of the trial.

The possibility of biased selection (whether purposeful or unconscious), can clearly confound trial results. This led Bradford Hill to recommend the use of chance in the selection of experimental and control groups (Hill 1990). Like Fibiger he suggested allocation of groups on an alternate basis - one patient allocated to the experimental group, the next to the control group. By removing physician and patient preferences, potentially confounding factors would be equally distributed by chance across the treatment groups. The system was however flawed as it depended wholly upon the co-operation of those involved with delivery of care. Far from removing clinician preferences, those who were aware of the sequence of allocation were able to gain direct control of assignment for individual patients (Hill 1990, Doll 1992).

Bradford Hill went on to suggest that the solution to bias was to use randomisation, a strict system of allocation based only upon chance. Again this was not a completely new concept (Hill 1990, Clarke 1996). Silverman describes how randomisation had been used by Fisher in the mid-1920s for agricultural experiments (Silverman1980). Aware that doctors may find this prospect difficult, he was careful to phrase his references to randomisation in his 1937 series of articles in *The Lancet* in neutral terms.

> I deliberately left out the words "randomisation" and "random sampling numbers" ... because I was trying to persuade doctors to come into controlled trials in the very simplest form and I might have scared them off. I think the concept of randomisation ...[is] slightly odd to the layman, or for that matter, to the lay doctor (Hill 1990).

He later described how unique circumstances in post-war Britain were fundamental to surmounting this obstacle (Hill 1963,1990), allowing him to establish a trial of treatment for pulmonary tuberculosis. Streptomycin had produced promising results in animal experimentation but the supply was limited. Once the majority of the supply had been distributed for priority treatment of the forms of tuberculosis which were usually fatal, the remainder was sufficient to treat a limited number of patients. Bradford Hill's argument that this supply would be best used in a rigorous clinical trial in which treatment was allocated randomly was accepted by the MRC. He suspected that with a larger supply the MRC would, like the surgeons in the penicillin trial, have struggled with the concept of withholding a potentially beneficial treatment from half of the patients.

The streptomycin trial used sealed envelopes containing randomly ordered selections from tables of random numbers. The standard treatment for tuberculosis was bed-rest to which 52 patients were assigned, whilst 55 received injections of streptomycin. The results were clear, with 38 surviving to 6 months in the control group compared to 51 in the experimental group (Streptomycin in Tuberculosis Trials Committee 1948). The success of this experiment was a major step in the development of clinical research methods. Although it was "neither the first to be randomised, nor the first to be controlled" (Clarke 1996), the streptomycin trial has gained a reputation as an important milestone in the history of the RCT. Chalmers argues that its landmark status does not only relate to the use of randomisation, but because "clearly defined precautions ... were taken to conceal the allocation schedule from those involved in entering patients" (Chalmers 2001).

Part II – Tension in modern debates on the use of RCTs

Clinician discomfort and Bradford Hill's caution over the inflammatory potential of randomisation, are rooted in different perceptions of the compatibility of scientific inquiry and therapeutic obligations. These differences have been held in tension through a debate which has continued for more than fifty years. It is a central theme

in this thesis. It drives discussion of the appropriateness of the use of the RCT method in two broad areas:

- The existence of uncertainty as the scientific and ethical basis for a trial
- The ethical rationale for the use of randomisation

Uncertainty as the basis of the RCT – the concept of equipoise

The point at which it is considered that there is insufficient evidence to clearly state the superiority or inferiority of an intervention, is termed equipoise (Fried 1974). Essentially given the prevailing state of knowledge, the likely risks and benefits of an intervention are equally balanced, and there are "no convincing grounds for supposing that any patient would be advantaged or disadvantaged if allocated to one treatment arm rather than another" (Robinson et al 2005). The Theory of Broad Benefit is fundamentally and explicitly dependent upon the existence of equipoise.

A central difficulty however lies in the fact that equipoise is a subjective and variable concept, rather than a constant and easily definable condition (Little 2003). If the underlying principle of a trial is shifting, so too is the ethical foundation for that research. Those contributing to the theoretical literature attempt to pin down the conditions of equipoise; discussions focus on exactly who is in equipoise and under what conditions it exists.

On whose opinion does equipoise rest?

Whilst a trial may be initiated after trialists agree that equipoise exists, individual clinicians may carry personal convictions based upon experience, a hunch or existing data (Schafer 1982). This is not surprising as trials are carried out as there is some evidence that that an intervention is promising[7] and it has been asked, "are decisions ever so finely balanced that a situation of personal equipoise may exist?" (Edwards et al, 1998). If an individual feels that a patients would benefit from a particular

[7] Trials can also be carried out to assess the effects of unevaluated standard treatments driven by concern over the use of intervention.

treatment, whatever the basis of that view, they are not personally in a state of equipoise. Zajicek states that offering the possibility of a treatment the physician feels is inferior breaches the guiding clinical principle of non-maleficence (do no harm) (Zajicek, 1995). Chard and Lilford suggest that clinicians with treatment preferences are obliged to make these clear to patients (Chard & Lilford 1998) and Bradford Hill argues that whatever the implications for a trial, the clinician with a treatment preference is obliged to give that treatment should it be available (Hill, 1963).

Freedman (1987) addresses this difficulty and suggests that a focus on personal beliefs is inappropriate and individual equipoise is a flawed concept, a "fragile" state, liable to change over time. He argues that "clinical equipoise" (now more commonly referred to as "collective equipoise" (after Johnson et al 1991), the uncertainty of the broader medical profession), is a more appropriate prerequisite to recruitment of trial participants. Here a clinician with a preference may recruit patients to a trial of an intervention for which there is no consensus in the medical community, without violating an ethical principle.

The concept of collective equipoise has had a mixed reception. This may in part be due to differences in emphasis with some theorists focusing on uncertainty over efficacy (a treatment-centred approach), and some on uncertainty over the physiological and preferential needs of individual patients (a patient-centred approach). In an argument which includes preferences alongside safety and efficacy Kodish and colleagues argue that physicians are trained to rely on rather than suspend their professional judgement, and that RCT recruitment is only ethical if a physician "cannot judge which arm of a protocol is preferable for a particular patient". They view randomisation as inappropriate "when patient preferences for one treatment or another can be elicited" (Kodish et al 1991). Hellman and Hellman see the collective view of the medical profession as irrelevant, arguing that patients have a right to the opinion of their clinician (Hellman & Hellman, 1991).

Where the shift of focus from the personal to the collective is accepted, there can still be differences within the medical collective as to whether or not the profession is collectively in equipoise. Concern has been expressed that trials have been carried out despite sufficient evidence from earlier research to indicate the superiority of a

treatment, rendering the withholding of treatment from the control groups of patients indefensible (Starzl 1985; Berry 1989). Empirical research focusing on a sample of industry-sponsored trials suggested that the principle of equipoise was being "systematically violated" (Fries & Krishnan 2004).

A definition of the level of uncertainty required to establish conditions of equipoise has been proposed by Johnson and colleagues (1991). Their study of potential trial participants indicated that a trial was viewed as unethical by 50% of their sample once 70% of experts had a treatment preference. When 80% of experts had a preference, only 3% per cent saw a trial as ethical. The authors suggest "zones of indifference" around a 50:50 split in opinion. Attempts have also been made to establish prospectively whether collective equipoise exists before a trial goes ahead (Lilford 1994; Solomon & McLeod 1995; Young at al 2004).

Miller et al (2000) suggested an additional "dimension" to equipoise; "community equipoise" would include the views of patients along with those of the medical collective. The possibility of patient equipoise is rarely addressed, and the term "community equipoise" is often taken to by synonymous with "collective equipoise", thus obscuring the potential role of the patient as party to the debate. This is in spite of the fact that public perceptions of the efficacy of an intervention can exert a powerful influence on trial recruitment. When media reports convinced patients of the superiority of laparoscopic removal of the gallbladder, two trials (Barkun et al 1992, Kunz et al 1992) were hampered by poor recruitment (Lefering and Neugebauer 1997). Lilford (2003) gives an example of how patient preferences could relate to decisions about participation in a prostate cancer trial.

> If the prior probability that radical treatment would improve mortality from prostate cancer was 5 percentage points, then a man who was particularly apprehensive about side effects (for example, a newly married man who wanted to have a child) might be better off with conservative treatment, whereas another (one, perhaps, who no longer placed a high premium on his sex life) might gain most from radical surgery. However, the losses and gains might balance for yet another man, both treatments having equal expected utilities, and such a person can accept randomisation without loss - he is equipoised.

Although the concept of patient equipoise is useful, especially as patients are increasingly seen as consumers with a role in shaping the research agenda (Hanley et

al, 2001; Marsden et al 2004; Oliver et al 2004), when patient equipoise is addressed, it is largely in terms of preference (e.g. emotional responses or lifestyle factors) rather than through a patient-led assessment of evidence of risks, benefits and efficacy. Caution is added to this debate by Little who argues that an emphasis on patient equipoise could be problematic:

> Patient involvement in decision-making is desirable, but to shift the responsibility for equipoise to the most vulnerable person in the medical transaction is to make unfair demands on those who wish for advice and guided decision-making (Little 2003).

When does equipoise exist?

Even where there is consensus that equipoise is sufficiently clear to legitimate a trial, difficulties can arise over time (Schafer 1982). Results from other trials can bring about reappraisal of the scientific and ethical basis of a trial. The Canadian Atrial Fibrillation Anticoagulation (CAFA) study closed after its data monitoring committee considered the results of two other trials which reported during the recruitment period (Laupacis et al 1991). The evidence can also, and possibly more influentially, grow *within* a trial. As more patients are randomised, data accumulate. Where clinicians are responsible for the delivery of trial interventions, they grow in practical experience and can develop opinions about efficacy, especially where they witness how an intervention succeeds or fails (Hellman 1979).

Data monitoring committees make periodic assessments of trial data to detect any early shift in the balance of evidence. While it is generally agreed that trials should continue until there are sufficient data to answer the research question posed (Grant el al 2005). It can however be the case that before a statistically significant difference between groups is achieved, a trend may emerge in one direction. Lantos argues that this raises difficulties and that clinicians should have access to interim data in order to make better choices for their patients.

> The self-imposed ignorance that trials require, between the time when we determine equipoise and the time when our statisticians confirm or negate the null hypothesis, creates unsolvable ethical problems. No patient-centred moral principles justify denying clinicians or patients knowledge of interim results to complete a trial. ... Who wants to be the

> last patient randomized, the one who, by failing treatment, allows the P value to move from 0.06 to 0.05? The answer, obviously, is nobody (Lantos, 1994).

Interim data can, however, be misleading. Treatment for a sequence of patients late in a trial may succeed, redirecting an apparent negative trend (or vice versa). For this reason interim results are usually released only to an independent data monitoring committee. Whilst this provides clear boundaries around the data, it does not address the individual difficulties which may be experienced by clinicians whose equipoise is disturbed during a trial (Hellman & Hellman 1991).

Debates about equipoise have recently resurfaced (Weijer et al, 2000; Shapiro 2000; Lilford 2001; Little 2003; Miller & Brody 2003) with attempts to clarify meaning and some calls for the word to be avoided because of its lack of clarity. Sackett (2000), who describes it as "a term whose time (if it ever came) has surely gone", states that for the term to be meaningful it should be used consistently, it should "describe something that's real" and it should be useful: "it must be frequently employed to aid and justify decisions." He argues that equipoise fails to meet all three requirements.

Empirical evidence

Empirical research on clinicians' views of equipoise is rather limited; work on patients' views is even more restricted. The available studies suggest that discomfort with discussion of uncertainty can complicate the experience of trial recruitment. Benson and colleagues found that 55% of oncologists felt that "discussions concerning which treatment is the right one" are uncomfortable (Benson et al, 1991). Dislike of open discussion of uncertainty was an obstacle to trial entry for 23% of a sample of principal investigators in breast cancer trials (Taylor et al 1984). Discomfort was anticipated by 58% of clinicians involved in recruitment to a substudy of the Collaborative Ocular Melanoma Study (COMS), which compared radiation therapy to removal of the eye (Taylor 1992). One opthalmologist described the discussions as "hard for both my patient and me". Concerns about expressing uncertainty were shown to have contributed to discontinuation of a trial examining treatment of isolated systolic hypertension in elderly people where there was a large

discrepancy between those who had agreed to make referrals (N=806) and those who actually did so (N=63) (Tognoni et al 1991).

In contrast some authors have identified willingness to collaborate in RCTs regardless of uncertainty. One study showed that 53% of doctors who preferred tamoxifen for their breast cancer patients would still recruit to a trial comparing tamoxifen with placebo (Alderson et al 1994). Another measured levels of equipoise amongst vascular surgeons for several clinical scenarios. For two scenarios almost all surgeons had a treatment preference (91% and 94%). Although this appears to indicate that collective equipoise did not exist for these scenarios and so trials would not be justified, 36% and 51% of the surgeons still indicated that they would be prepared to recruit their patients to trials in these same situations (Young et al 2004).

These studies suggest that some clinicians' view of equipoise may differ in practice from the way it is presented in the theoretical literature, in sharp contrast to the only study identified which explicitly seeks to address patient equipoise. Mills and colleagues interviewed men with localised prostate cancer who had consented or declined to participate in the ProtecT trial. It was shown that the concept of equipoise was recalled and understood by the majority. Decisions about whether or not to participate directly related to whether or not they found the position of equipoise to be acceptable. The authors comment that "belief in clinical equipoise was key to participants' consent to randomization" (Mills et al 2003).

Equipoise as the ethical rationale for randomisation

Equipoise and randomisation are inextricably linked. As randomisation is legitimated by the existence of equipoise, a fluid and for some an inflammatory concept, it is not surprising that it provokes mixed responses. According to the Theory of Broad Benefit, randomisation ensures equitable distribution of possible risks and benefits of an intervention, and offers a means of decision-making in the absence of clear clinical evidence. Given the possibility of exposure to unknown hazards, it has been suggested that for new interventions the ethical approach is to randomise from the very first patient (Chalmers 1977; Spodick 1983). There is, however, evidence of much

discomfort over randomisation particularly for trials of potentially life-saving or life-changing interventions. To seek consent a clinician must give information which may be both technically and emotionally difficult for their patients, a process which has been seen as involving "overwhelming difficulty" for caregivers and is "needlessly cruel" for patients (Tobias and Souhami 1993). In such trials the impact of an intervention is demonstrated when more patients in one arm die or have poorer health outcomes than those in another arm. The idea that health and survival may depend upon chance raises almost instinctive objections. Echoing concerns expressed over the streptomycin trial, it has been suggested that individual patients are sacrificed for the greater good (Thornton 1993; Yao & Wei 1996).

Randomisation as an indication of equipoise: a marker for the distinction between care and research

The links between equipoise and randomisation are two-way. As randomisation is initiated by a position of equipoise, it stands as an indicator that uncertainty exists. It is such a clear and in some ways a startling deviation from the usual approaches to clinical decision-making, that it should act as a beacon at the intersection of care and research. Empirical studies have however repeatedly shown that there are major difficulties for potential and actual trial participants in appreciating the random nature of a 'treatment' decision, and the departures from standard approaches to care. The extent to which randomisation and the rationale behind its use are clear to potential and actual participants has been addressed by a number of researchers.

Important data on perceptions of randomisation were first reported in a series of highly influential research studies which examined the decision to join a psychiatric trial and understanding of the implications of that decision (Appelbaum et al 1982; Benson et al 1985; Appelbaum et al 1987). They suggest that in their study "vacuums of knowledge" about trial aims and methods could lead directly to assumptions that care had been tailored to suit individual needs (Appelbaum et al 1987). This is one aspect of what is referred to as "the therapeutic misconception"[8]. In some cases

[8] Taking part in research with the erroneous perception that there are no risks, or in anticipation of particular benefits which might be unrealistic, is another manifestation of therapeutic misconception (Appelbaum et al 1982).

participants in these studies created elaborate arguments to support the therapeutic misconception, distorting small aspects of the study design.

To illustrate the phenomenon a number of case studies are described (Appelbaum et al 1982). One participant in a trial comparing treatments for borderline personality disorders was able to give a clear description of the purpose and method of the trial, the use of placebo and was able to define randomisation, but when asked how the choice in her own case would have been made, she commented: "I hope it isn't by chance".

There is other evidence that patients in a wide variety of settings have similar difficulties (Lidz et al 2004). Whilst myocardial infarction survivors participating in a double-blind placebo-controlled trial were well informed about various aspects of the trial, randomisation was less well understood with only 42% indicating awareness of the role of chance in allocation of treatment (Howard et al 1981). Very similar finding have been recently reported amongst parents who were "highly knowledgeable of the main research components" of a paediatric trial of treatment for autism. Although 99% were aware of possible risks and benefits of the trial, and 99% knew that their child may be assigned placebo, 27% felt that the 'treatment' that they were given was "based on individual needs to ensure best care" (Vitiello et al 2005).

Interview-based studies have identified the same phenomenon. Wynne found that some participants who were receiving hyperbaric oxygen in a trial of therapy for multiple sclerosis felt that they were enrolled because hyperbaric oxygen was selected by their clinician as the best treatment for them (Wynne 1989). Featherstone and Donovan found that most of their sample of men who participated in a trial of treatments for benign prostatic disease were able to recall and describe the role of chance in randomisation, but "developed alternative lay explanations to make sense of their experiences" (Featherstone & Donovan 1998). Very similar reactions to randomisation were reported by Gammelgard and colleagues (2004) from a qualitative study of Danish patients' decisions about trial participation in the context of acute myocardial infarction.

Research has also assessed the ability to understand the concept of randomisation outside the context of a medical encounter (Kerr et al 2004). Study participants who were given a variety of descriptions of random processes largely recognised a random element. The authors found that their participants often found randomisation to be acceptable only if their descriptions included a reasonable justification for its use.

These studies consistently indicate that even with facts to hand about the trial situation, randomisation can be difficult to understand. This does not appear to relate to an inability to understand the nature of randomisation, but to difficulties in applying decisions based on chance to clinical care. This however is precisely the problem; decisions based on chance are inappropriately realigned with expectations of care. Without an appreciation of the rationale for its use and the difference between care and research, randomisation can be a puzzling and problematic concept.

Part III - The special case of neonatal RCTs and associated pathology studies

The ethical issues and underlying tensions which are raised above are relevant to all trials. In considering trials which are conducted in neonatal intensive care, many of these issues are magnified[9]. Trials conducted in this sub-specialty of neonatology are often potentially life-saving therapies; they can involve discussions of the implications of trial participation with stressed individuals, and the difficult circumstances involved can potentially impede appreciation and understanding of complicated information about research. These issues are all further complicated by the fact that those considering trial participation do so on behalf of another, vulnerable and legally incompetent individual. The fact that the proxies charged with this responsibility are themselves in a vulnerable position only serves to further problematise a complicated situation.

[9] Although neonatal trials are often discussed in broad terms, not all neonatal trials involve intensive care and not all intensive care issues are issues about survival. Neonatal trials are in fact extremely diverse, ranging from assessment of routine everyday issues (feeding , drug dosage studies) to cutting-edge potentially life-saving therapies. Those enrolled in neonatal trials may be similarly diverse in terms of their health status, ranging from extremely premature, very low birthweight babies to fully mature term babies. Trial interventions may be initiated at different points post-delivery, some involving no time pressures whilst others involve emergency situations.

Trials in this setting are worthy candidates for study simply because it is important to understand the workings and implications of this situation. They are also instructive as they involve particularly difficult challenges. If the thorny issues at the centre of difficult trials can be addressed, it might be possible to then deal with trials in more simple situations. For this reason this thesis explores decision-making for clinicians and parents in neonatal trials in critical settings.

Neonatal trials in critical settings

The decision-making process for neonatal trials in critical settings involves stressed parents who fear for the safety of their newborn, who are asked to make an important decision at a difficult time. For trials where an intervention must be carried out or initiated shortly after birth, a decision about participation may be sought during or immediately after delivery. Manning defines consent for trials requiring decisions in less than 24 hours as "emergency consent" (Manning 2000). Neonatal trials can involve shorter time periods. If it is necessary to transfer a baby to another hospital for specialist care, the mother and baby may be separated when trial enrolment is offered. Fathers who accompany their baby can be asked to make a decision without their partner being present, as can women who are inpatients and alone when approached for an urgent decision. Where interventions takes place at a later stage, parents can be in the highly stressful position of watching their critically ill baby being cared for in a neonatal intensive care unit (NICU) (Miles et al 1991; Shields-Poe & Pinelli 1997; Dudek-Shriber 2004) at the point of decision-making. For some decisions about a trial can be requested shortly after having their baby christened, named or blessed on a NICU, a clear indication of the seriousness of their situation (Snowdon et al 1997).

Manning points to "severe impediments to autonomy experienced by parents of sick neonates", expressing concern that it is unlikely that achievement of the standards required for informed consent or refusal will be met (Manning, 2000). It has been argued that "informed consent from poorly educated parents entering a complex trial in stressful conditions is a sham"(Anon 1995) and "an elaborate ritual" (Mason 1997). Levene and colleagues suggest that the more extreme the circumstances, the more

likely parents are to consent (Levene et al 1996); there is some empirical support for this. A review of 249 RCTs published in a paediatric journal over a 15 year period, showed that 111 trials reported a consent rate of 100% with trials in neonatal care the most likely (96% of the neonatal trials) to report total acceptance (Campbell et al 1998). In a study involving parents of newborns, almost one third agreed to their baby's inclusion in a hypothetical trial scenario involving a moderate risk to their baby but *no direct benefit*, with the parents of NICU babies being significantly more likely to agree than other patents (Singhal et al 2002). This is in sharp contrast to the situation discussed in Chapter 1, wherein concerns are raised at how few trial-eligible adult patients agree to participate in a trial.

Professional responses to collaboration with neonatal RCTs

Neonatologists have written about their concerns over the position of vulnerable parents who are asked to consider enrolment of their baby into a trial. Walterspiel expressed concern over the lack of autonomy and engagement that he felt was shown by some of the parents of babies in his care. He described parents' reactions when he sought consent for a simple trial of heat shields. He felt that information about the shields "was acknowledged like a message from a distant planet". He was never refused but felt concern about the encounters and the quality of consent (Walterspiel 1990). McIntosh argued that in his experience stressed parents are quite suggestible. He stated that parents of babies in neonatal care will give consent for doctors "to do almost anything to their baby" and sees giving difficult information at such an emotional time to anguished parents as inappropriate (McIntosh 1993).

Although the views of professionals associated with trials in other specialties have been the focus of many empirical studies, the views of neonatologists have rarely been assessed. One exception is a study by Mason and colleagues in which the views of 107 European neonatologists were compared to those of 200 parents who had accepted or declined enrolment in one of several neonatal trials. The majority of neonatologists (74%) expressed concern about parental competency and almost half felt that it was inappropriate for parents to "know certain information". The authors report that:

> Some doctors reported limiting disclosure about risks so as not to worry parents or to obtain consent , and ... they often simplified information (with the stated aim of providing the most appropriate information to parents) (Mason et al 2000).

This difficulty with discussions around trial enrolment suggests that such research in this setting may involve a major clash of duties for the clinicians who act as trial collaborators and adds to the case for the need for further research in this area.

Parental views on participation in neonatal RCTs

Several research studies (mainly questionnaire-based) have focused on a number of areas associated with parental decision-making for neonatal trials. They are:

- The impact of stress
- Standards of consent
- Factors affecting decision-making
- Parental preferences for making a decision

Stress

Two studies indicated that the majority of parents did not feel that they were made anxious by the consent process. Although 38% of the parents surveyed by Burgess and colleagues and 24% of those surveyed by Stenson and colleagues felt that recruitment had added to their stress, most (59%) in the former study stated that they were calm when they made their decision. The majority of the parents in the latter study were happy with their decision to consent (79%) (Burgess et al 2003; Stenson et al 2004).

Factors affecting decision-making

The specific reasons for deciding to enrol or not to enrol a baby in a trial have rarely been addressed. When parents in the study by Mason and colleagues were asked why they had chosen to enrol their baby into a trial, 64% thought that their baby would benefit, 49% that babies would benefit in the future, and 39% saw no risk or distress to their child. The authors give no figures for the decisions that parents made not to enrol their baby, but they list as factors: risk, distress to the baby, distrust as well as "dislike of the tone of approach of the doctor", their own state of shock, and

inconvenience of follow-up (Mason et al 2000). Burgess and colleagues also identified benefit to the baby as the primary reason for agreeing to trial enrolment (Burgess et al 2003). Using scaled ratings Zupancic and colleagues found that parental consent for their baby to participate in one of three neonatal trials was associated with higher perception of benefit and lower perception of risk (Zupancic et al 1997). In a study which included the views of parents who made decisions about enrolment in a range of neonatal cardiac surgery trials, five broad reasons emerged, relating to the possibility of societal benefit, personal benefit, risk or no risk, and to the parents' anti-experimentation beliefs (Hoehn et al 2005).

Parental preferences for making a decision

Several authors have discussed whether the standard approach to consent for certain neonatal trials is appropriate (Allmark 1999; Manning 2000). Three studies have clearly shown that parents do not wish to relinquish their role in the consent process. Stenson and colleagues (2004) found that 83% would not wish to pass over control of decisions about participation to an ethics committee and 93% and 98% in two other studies rejected the suggestion that doctors rather than parents should decide whether or not a baby is enrolled into a neonatal RCT (Burgess et al 2003; Morley et al 2005).[10]

These studies questioned parents on the relatively straightforward issue of whether or not it would be appropriate for the decision about participation to be passed over to another responsible party. Research carried out with parents who had experienced standard consent procedures for an emergency neonatal trial were asked about a methodologically more complicated approach to decision-making (Snowdon et al 1998). One of Zelen's suggestions for trials for which the decision-making process might be problematic is to randomise trial-eligible individuals prior without making an initial approach to discuss the trial. Those who are allocated to an experimental arm of a trial are approached and asked whether they wish to accept the trial and the allocation. Those randomised to the control arm, (which in this model must involve

[10] A fourth study also demonstrated a smaller majority of parents wishing to be involved in the decision about recruitment, with 32% wanting a neonatologist to "advise" them about enrolment of their baby into a trial, but ambiguous phrasing makes interpretation of this finding difficult (Zupancic et al 1997).

no changes to their situation, for instance allocation to an arm dictating initiation of/continuation with standard care) are not approached. Parents were given a set explanation and asked to consider their views had this approach been used in their case. They were evenly divided in accepting or rejecting this method of recruitment. Crucially however those rejecting this method were more likely to be parents of control group babies (in the original trial) suggesting that it is unacceptable to many of those that it is actually designed to protect.

The differences in the proportions of parents who were drawn to the idea of passing over responsibility for consent was much higher in this latter study than in the three quoted earlier. This may relate to the particular approach suggested by Zelen but it may also be a function of method. As the parents spent time discussing the issue of consent in the context of their experience a greater level of engagement with the subtleties of the ethical issues involved may have been promoted than would be the case for a questionnaire-based study with a box to tick or a scale to rate.

Standards of consent

In the study by Mason and colleagues, a particular aim was to compare the accounts of the parents to agreed standards for consent. They found that in 70% of cases there were some difficulties with the standard of consent and 40% of the parents were judged not to have been competent to consent. Parents were more likely to be judged to have had difficulties with the standard of consent if their baby was offered enrolment in research which was urgent rather than non-urgent. Almost half of the sample (47%) did not rely upon written material about a trial but only on the oral information given by a doctor. In the majority of cases parents felt that they had made their decision voluntarily (74%) (Mason et al 2000).

Ballard and colleagues judged that 68% of their sample of parents of babies enrolled in a neonatal analgesia trial understood the purpose of the trial. Although 95% could describe benefits, only 5% of the parents could describe risks (Ballard et al 2004). Singhal and colleagues judged that there were difficulties with the quality of consent given by 70% of the parents in their sample. The difficulties associated with processing and retaining complicated and potentially disturbing information about

trial participation in this highly emotional setting have also been assessed by the authors of all of the papers described above and it is clear that parents do often experience difficulties in understanding and recalling details of the neonatal trials for which they have given consent. Whether sufficient information was given but not taken on board, or never given in the first place, cannot be said.

A further study which explored parental understanding of randomisation in a neonatal trial indicated, like the studies involving adult trial participants (Featherstone & Donovan 1998; 2002; Gammelgard 2004), that randomisation and the basis of the trial could be unclear for many (Snowdon et al 1997). This paper is considered in further detail in the Chapter 4.

Views of neonatal trial pathology studies

For some of those who choose to enrol their baby in a neonatal trial, there can be another potentially difficult trial-related decision-making process ahead which has received very little attention. For trials which involve conditions for which a substantial mortality rate is likely, a post mortem pathology study can be included as part of the trial design. Such studies assess the possible impact an intervention has had on those who have died, and if they are not carried out, potentially serious consequences of an experimental treatment could go undetected. Where babies who have been enrolled in a trial do go on to die, parents can therefore be asked to make a decision about the possibility of a trial-related post mortem (PM). This can be a complicating element in an already difficult situation. A degree of altruism is required of parents who are in the most stressful of circumstances, and benefits to research may not seem important at that time. As consent rates for perinatal PMs are declining worldwide (RCP 1991; Sanner 1994; Wlodaver 1994; McPhee 1996; Chariot et al 2000; Loughrey et al 2000) it does seem that the majority of parents are either not being approached for permission or are declining to consent. Pathology studies with inadequate numbers are unreliable and so this decline clearly has important consequences for the quality and integrity of data.

In attempts to improve PM rates generally there has been much interest in charting knowledge of, and reactions to, PMs outside of the perinatal context. Little attitudinal

research has been carried out in the neonatal context and none with particular reference to neonatal trials. Since trial participation can alter the reasons for which consent is sought, and could significantly alter the experiences of those involved, this is an important omission. There are however elements of the existing empirical literature in the perinatal and paediatric field which can shed some light on the complexity of professional and parental determinants of PM rates.

Professional views regarding perinatal post mortems

The literature on professional views is useful in highlighting attitudes to the use of PMs in different clinical circumstances, and for different groups of professionals.

Van Marter and colleagues (1987) report a records-based review supplemented by a questionnaire-based study. In the review they found an important association between rates of PM and presumed cause of death, with extremely premature babies being least likely, and those affected by a congenital anomaly being most likely to undergo PM. They also found that giving permission for a PM was associated with repeated perinatal loss. Both findings seem to suggest that a parental wish for an explanation of events is important. It is, however, unclear from a review of records whether actual parental views, or professional perceptions of those views, are the most influential in this matter. In the questionnaire-based element of the study, only professional views were sought. PMs were seen as more important by senior staff than by junior staff. In general the sample saw the importance of the PM as being strongly related to the likely cause of death; whilst only 31% felt that they were very important in cases of extreme prematurity, when the cause of death was thought to be a congenital anomaly or was indeterminate 94% and 91% respectively felt that they were very important.

The views of paediatricians and paediatric residents were surveyed by Stolman and colleagues (1994). Although the majority felt PMs provide valuable information, 20% felt that they are unnecessary if the disease was known before death. Where consent is not sought for a PM, this related to concerns not to distress the family and respondents' belief that little information would be obtained. Seventeen percent of the sample indicated that they do not approach families who are upset.

In assessing the views of neonatologists, obstetricians, midwives and neonatal nurses, Khong and colleagues (2001) found that the most influential factor in the offer of a PM was perceptions of parental desire for a PM; where the diagnosis was clear, the parents did not desire a PM and planned no further pregnancies, there was least inclination to offer a PM. They argue that the determinant of PM rates in their sample was parental refusal, as the neonatalogists and obstetricians did not generally demonstrate reluctance to make an approach for consent.

Cottreau and colleagues (1989) considered the views of pathologists and other clinicians. Although the majority of clinicians saw PMs as useful, 50% felt that they should not be offered when the likely cause of death is known. Younger clinicians and younger pathologists saw PMs as less useful than their senior colleagues. There was greater discomfort in discussing PMs amongst paediatric staff compared to those dealing with adults.

Parental views regarding perinatal post mortems

Data are available on parental attitudes in a small number of studies. Although none of these relate to trial-related PMs, they illustrate some of the issues which might also operate for parents of babies who were enrolled in a neonatal trial.

McPhee and colleagues (1986) included parents in a sample of bereaved relatives who had or had not permitted a PM. Although most likely to show concern over disfigurement, parents were singled out as the group especially likely to see benefits of a PM. As 45% of those who did not permit a PM stated that they had not been approached, the authors argue, in contrast to the study by Khong and colleagues that clinician reluctance to offer PMs may be more important than reluctance of relatives to sanction procedures.

Rankin and colleagues (2002) found from a postal questionnaire of parents using a bereavement service that 81% of responding parents had taken up the offer of a PM. This is a high acceptance rate and may be due to the source of the sample, and the fact that the study included women who had miscarried or had terminated a pregnancy due to an abnormality. Whilst the majority of those accepting a PM did so for their own

benefit (e.g. wanted more information, wanted closure), 24% wanted to contribute to research. The majority of the refusers felt that their baby had "suffered enough", and that a PM would not help them.

McHaffie and colleagues found that 38% of their sample of bereaved parents refused permission for a PM, with concerns over disfigurement of the baby as "a major preoccupation" (McHaffie et al 2001). Crucial to decision making was whether or not there was any further information which the parents, rather than the medical team, felt they needed.

Neonatal trials - a challenging but appropriate area for research

The opinions expressed in the non-empirical literature suggest that parental consent in this setting is viewed as compromised and illusory. The empirical studies indicate that there are deficits in knowledge but that most parents still wish to be involved in the decisions about entry into a neonatal trial for their baby. Where parents do enrol their babies in a trial it is largely in the hope of benefiting their baby, society, or both. Assessment of risk does not feature as a prominent issue.

Although this appears to give a useful picture of the parental experience, it is however based on data which are largely stripped of context. The studies mainly involve mixed samples with parents having considered a variety of trials. None[11] involve an assessment of the conditions of a trial, and none deal with the issue of emergency consent in any detail. What is missing from these studies is a sense of how the circumstances in which they find themselves impinges upon their experiences and the decisions that they made. The lack of information about the views of neonatologists is also striking. These are important omissions given that the ethical concerns which are raised in relation to neonatal trials are all in relation to the potential effects of the context in which they are carried out, and that professionals involved in this field have raised many concerns about their own and the parental position. Tensions relating to

[11] With the exception of the research study which will be discussed in Chapter 4.

care and research, to the relative positions of collaborator and [proxy] participant, are highly relevant in this field but are quite simply not available. It is important that research should afford a greater understanding of this situation and of the dynamic between parental and professional experiences and views.

Chapter 3 - Methodological issues for research on trial collaboration and participation

The issues which are at the heart of this thesis are complex, having their origins in perceptions of duty, and expectations of care, and arise in a highly emotional context. Guidance on how these issues might best be addressed in methodological terms can be gained from considering the previous research literature on collaboration and participation in trials. The available empirical studies relating to neonatal trials provide pointers but it is also necessary to consider the substantial[12] evidence which pertains to the broader trials situation. This more general literature has provided a growing level of understanding of many facets of involvement with trials and has gradually increased in both sophistication and methodological rigour. It consists of an eclectic range of data from a wide variety of sources, collected by trialists and other researchers, from simple elements of trial data, including correlations between demographics and acceptance or refusal rates (van Bergen et al 1995), first-hand accounts (Moran 1993; Dobkin 1990; Walterspiel 1990; Klein et al 1995; Rabinovitch 2004), questionnaire-based and, more recently, interview-based studies. Increasingly research is being carried out by social scientists from an independent external perspective.

This chapter briefly highlights some areas of methodological concern regarding aspects of the body of literature, and secondly focuses on the rise of qualitative studies in the context of trials-related research. A consideration of the strengths and weaknesses of different approaches has helped shape the research methods for this thesis.

Part I - Areas of methodological concern

An examination of the existing literature suggests three broad areas of concern which are considered below. They are:

[12] Notwithstanding the common statement, even in recent research papers, that little attention has been paid to the views of those involved in trials.

- the impact of a focus on attitudinal barriers to accrual
- the use of hypothetical data
- the treatment of trials as a collective

The impact of a focus on attitudinal barriers to accrual

As indicated in Chapter 1, difficulties with inadequate recruitment rates are a major problem in the management of clinical trials. Concerns to address problems with accrual have resulted in a proliferation of research assessing the attitudes of professionals, patients and the public towards RCT collaboration and participation. They have led to a quite striking bias which has shaped the empirical literature in important ways.

Where research is driven by one dominant line of inquiry, there is the risk that other issues are left under-researched. Although they do exist, there are far fewer papers which report reasons *for* participation, or which explore more positive attitudes to trials. Once recruitment and randomisation have taken place, it seems that there has been less interest in gaining further understanding of experiences of trial collaboration or participation[13]. There appear to be no publications which report in detail the subsequent experiences and rationalisations of patients who reject trial participation.

The aim to understand how recruitment to trials can be promoted or inhibited has also led to certain methodological constraints within the field. Some of the available publications do offer some indication of the complexity of factors affecting decisions that are made in relation to RCTs, such as the widely quoted group of Canadian studies carried out in the late 1980s and early 1990s by Taylor and colleagues (Taylor & Kelnor 1987; Taylor et al 1994; Taylor 1992i, 1992ii), and the more recent careful study of the motivators to recruitment for American oncologists by Joffe and Weeks (2002). Many papers however produce a simple list of barriers or incentives and it is common for subsequent studies to simply conform to the templates of earlier research.

[13] This is changing, as indicated by a careful study of the experience of longterm involvement in a diabetes trial and the impact of transition to care after trial closure (Lawton et al 2003).

The generation of hypothetical data

A number of the early studies produced data on attitudes to trials which were essentially hypothetical. Research respondents were often drawn from the public (e.g. Cassileth et al 1982; Kemp et al 1984), and from patient populations, the rationale being that such individuals constitute the pool from which future trial participants will be drawn. Where research involved patients, they were often selected as they had experience of a particular disease; cancer patients were asked for their views on whether they would chose to participate in oncology trials (Cassileth et al 1982), and more recently this approach has been used to assess the views of hypertensive patients (Halpern et al 2003), patients undergoing kidney dialysis (Israni et al 2001) and again oncology patients (Solomon et al 2003). There were also studies where respondents had no experience of the disease in question or trial participation (e.g. Saurbrey et al 1984; Mettlin et al 1985; Llewellyn-Thomas et al 1991; Comis et al 2003). In this latter case the responses are inevitably conjecture. This type of study does not take into account the possibility of a disparity between how trials are seen in the abstract and how individual trials are perceived and experienced in actuality, an issue which is explored in greater detail below.

The treatment of trials as a collective

Although trials are very varied in terms of their settings, design, and the implications for those involved, they do have several common features, such as the use of randomisation, the need for informed consent, and their comparative and experimental nature. Research which explores trial collaboration and participation often does so at this collective macro level, as was the case with the research samples of parents involved in neonatal trials, assessing the common ground via individuals recruited from a variety of trials (e.g. Langley et al 1986; Trimble et al 1992). A sample of oncologists, clinical trials or senior nurses and family physicians for instance were asked to consider "not just one particular trial, but their entire experience with trials" (Langley et al 1986). Whilst research which deals with the broader, overarching concepts of trials is useful for mapping out common areas of concern, it does not aim to take account of the conditions created by particular trials. By treating disparate trials with some common factors, such as the medical specialty from which they

originate or their use of a placebo control, as if they were a single coherent entity, important aspects of trial experience may be lost.

A paper by Taylor (1992a) is pivotal in demonstrating the difference between the data which are collected at the abstract collective level (the macroclimate) and those which focus on actual reasons for taking part in real trial (the microclimate). Taylor assessed the incentives of 96 clinicians to participation in RCTs generally and in a substudy of the Collaborative Ocular Melanoma Study (COMS) as described in Chapter 2. The respondents had already made a decision to collaborate and to recruit patients to this trial. The doctors were interviewed before commencement of the trial and five primary incentives to participation in the two contexts were classified. With reference to RCTs generally, the most frequent incentives were grouped as 'benefit to society', i.e. 'answers clinical questions, provides essential quality control for entire medical system'.

The response 'benefit to society', was given by 'almost all participants'. When considering the COMS trial there was, however, a dramatic reversal of incentives; 'benefit to society', the *primary* incentive to participation in RCTs generally, was the *least frequent* incentive (43% gave this response). The *primary* reason for participation in the COMS trial, given by over two thirds of the sample, 'benefit to the institution' ('grant support, professional renown for institution'), was the most *infrequent* reason for joining trials in general (12%).

This paper draws attention to the differences between accounting for actual (or 'informed') and hypothetical decisions. It clearly shows that specific trials create specific conditions which inevitably affect attitudes, an issue which is considered further below.

Part II - The rise and development of qualitative studies in relation to RCTS

Quantitative and qualitative research methods have been regarded historically as "antithetical" (Pope and Mays 1995i). While quantitative researchers are often said to charge qualitative research with being unscientific and subjective (Pope and Mays

1995ii), Oakley (1998) has argued that "notions of experimentation, random allocation and quantitative methods are like a red rag to a bull for many social scientists." Scientists and clinicians who carry out RCTs, "the epitome of the quantitative method" (Pope and Mays 1995i) are however increasingly working with qualitatively orientated colleagues and in recent years a progressive and developing field of co-operative research has arisen in order to better understand the impact of trials on participants, and to improve the quality of RCTs.

The publications which have contributed to the rise of the use of qualitative approaches in this field which are described below are not all qualitative, nor are they all empirical, but they are selected as they represent important steps in a growing drive to understand more about the complex workings and dynamics of the RCT situation.

The key developmental steps which are considered are:

- Recognition of the importance of the microclimate of individual trials
- Early use of qualitative methods
- Qualitative research as an intervention
- Qualitative research as an outcome

Recognition of the importance of the microclimate of individual trials

When research focuses on the conditions of an individual trial, exploring how it functions or how it is perceived and experienced by those involved, it is the research microclimate that is being assessed. To understand a trial it is necessary to come to an understanding of its microclimate. Such understanding, if placed into the public domain for a variety of trials, may then provide a base from which more sophisticated insight into the research macroclimate might be achieved.

Reflection on the part of trialists

To some extent trialists have led the way in attempting to understand the microclimate of trials as they have described the progress, conduct and sometimes the failure of

their own research (e.g. Baines 1984; Plaiser et al 1994; Hunt et al 2001, Vickers et al 2002).

Some trialists reported elements of their trial data which shed some light on patients' reactions to the constraints of the research setting. Abramsky and Rodeck (1990) reported dropout rates due to patient dissatisfaction on allocation in a trial comparing chorion villus sampling (CVS) to amniocentesis. Williams and colleagues (1980) reported poor patient compliance in a trial on ambulation in labour. Some trialists reported on the impact of the views or behaviour of clinicians on the progress of their trials which illuminate the central tensions which are of interest in this thesis.

Oakley (1992) describes how a trial of the effects of antenatal social support on birthweight which involved standard antenatal care or standard care plus support from research midwives was complicated by midwives' perceptions of need amongst the women involved. The trial recruitment process made it clear that additional support would be offered only to those women allocated to the support arm of the trial. During the trial some of the research midwives attempted to circumvent allocated to the control group for the women who they felt were in particular need of support[14].

A similar phenomenon was observed in a trial of restricted versus liberal use of episiotomy in labour, which was severely undermined when obstetricians who had agreed to collaborate over-rode random allocation where it conflicted with their personal judgement of the management of labour (Klein et al 1995). It was shown that one third of the obstetricians did not accommodate the protocol in their practice, continuing to use episiotomy in 90% of cases in both the experimental and the control arms of the trial. The authors acknowledge the difficulty involved in trials where collaborators are asked to alter an established practice. They suggest that there can be an erroneous assumption of equipoise on the part of individual clinicians which is implicit in the design of RCTs.

[14] A subsequent questionnaire indicated a "deprivation effect" amongst those in the control group who were alerted to the possibility of support, but were allocated not to receive any additional intervention.

It became clear just from this reflective process on the part of trialists that if a trial is not acceptable to clinicians, or does not meet patients' needs, it may be doomed to fail with low levels of recruitment or high dropout rates.

An empirical focus on individual trials

Over the years the number of studies which have addressed issues pertaining to an individual trial has grown. Among the early leaders were Mattson and colleagues (1985) who focused on the motivational factors for patients who have survived myocardial infarction to join the Aspirin Myocardial Infarction Study (AMIS) [15] or the Beta-blocker Heart Attack Trial; Elbourne's 1987 exploration of the views of pregnant women about their participation in a trial of patient-held medical records (Elbourne 1987) and Henzlova and colleagues (1994) who considered the views of patients with congestive heart failure with reference to the placebo-controlled Studies of Left Ventricular Dysfunction. These studies were not without their methodological limitations[16] but they are interesting as they are part of a move to consider factors which pertain for individual trials.

Early use of qualitative methods

Although most of the earlier research on trials was not qualitative, or used qualitative data in a rather restricted way, it did provide the basis and impetus for a wave of qualitative studies, and over the years much ground has been covered. Qualitative researchers developed an interest in understanding more about exactly how trials influence the experiences of those involved, as well as understanding the decisions that people make. Their independent position and their backgrounds in a range of academic disciplines often brought new insights as the factors which render a trial attractive or unattractive to patients or to those responsible for recruitment, may not be

[15] The AMIS participants were asked why they had decided to join the trial. The majority of responses are categorised into 'self-directed motivations' such as, receiving medical monitoring, reassurance, physical improvement and prevention,(74%) and altruistic motivations such as a desire to help others, to help heart patients in particular, to participate in research and to contribute useful data (65%).
[16] BHAT Trial participants completed a self-administered questionnaire. They could choose only one reasons for participation from a closed list from which they could choose only one factor. This method indicates the primary reason for participation but does not allow for inter-related reasons or multiple reasons which were evident in the AMIS sample. The most common response, 'my doctor recommended it' was given by 31% of the sample.

immediately obvious to those involved in running a trial. Uncovering these factors and exploring professional and patient experiences became an important area for qualitative research. Two examples highlight the value of this approach.

Gray was a leader in the field (Gray 1975). Although this work is infrequently cited, it is an example of how important it is to consider in a sensitive way, the varied influences on trial participation. He interviewed women who participated in a double-blind study comparing a conventional and an experimental drug for labour-induction. Gray argued that enrolment in the trial had been used as a service for private patients, a means of accommodating a physical or social need for induction and a way of bypassing a longer wait for an elective induction; for the clinic patients, however, he felt that enrolment was due to the need for research subjects and that their eligibility for induction was less clearly indicated.

Ryan used in-depth interviews to understand the difficulties for men participating in a HIV trial and found that a particular problem was the clinic visits that were required. These made participants' HIV status explicit to other attendees and it was felt that presence at the clinic implied or revealed sexual orientation. Some asymptomatic participants were disconcerted by encounters with other attendees in a more advanced stage of the disease than themselves. Ryan argued that these factors had not been made clear to the trialists, and it was the outsider perspective and the research methods which allowed these issues to be uncovered (Ryan 1995).

From the late 1980s onwards a series of reflective papers started to appear, some of which have already been discussed (Appelbaum et al 1987; Featherstone & Donovan 1998; 2002; Cox 1999, 2000; Glogowska et al 2001; Lawton et al 2003; Mills et al 2003; Rogers et al 2003; Gammelgaard 2004; Hamilton-Brown 2004). Whilst qualitative data are often used to add breadth to quantitative data, qualitative approaches have also proved to be invaluable in allowing a deeper understanding of the meanings attached to trial participation, which could not have been tapped by quantitative methods alone. Rogers and colleagues assessed understanding of participants in a trial of methods to manage anti-psychotic medication, and provided insights into the value of trial participation in terms of bringing the participants into contact with the trialists. They comment: "Our findings highlighted aspects of the

experience, process and outcome of the trial, which remain latent in the quantitative assessment" (Rogers et al 2003). Featherstone and Donovan who carried out in-depth, semi-structured interviews with men who had been offered participation in a urology trial similarly argued that a structured questionnaire would have produced potentially misleading results given the subtlety of the data their approach generated. They had found important misconceptions about the trial through their analysis and argued "[I]t is likely that the majority of these participants would have been shown to be aware that they were taking part in a trial and to have understood some or most of the basic aspects of the design."

Qualitative research as an intervention

Whilst researchers have frequently commented retrospectively on one trial to improve practice in subsequent trials, more recently qualitative research has been carried out to guide and effect practical changes in an existing trial. Donovan and colleagues (2002) carried out a radical qualitative study using action-research methods in which men were randomised to different recruitment procedures for a prostate treatment trial. The results of the findings from in-depth interviews, analysis of audio-taped recruitment appointments and follow up interviews, brought about crucial practical changes in the management of the trial. They found that there were difficulties for the professionals involved in recruitment in discussing the basis for the trial (equipoise) and in presenting treatments without introducing bias or using terminology which was subsequently misinterpreted by participants. This insight into the difficulties that existed was used to train the professionals and to modify the trial procedures. Not only did the understanding gained through the qualitative study bring about important changes to the information processes to promote participant understanding, the trial itself benefited from an increase in the randomisation rate from 40% to 70%. The authors argue persuasively for the broad value of their approach, stating:

> Qualitative research methods applied in combination with open minded clinicians and flexible or innovative trial designs may enable even the most difficult evaluative questions to be tackled and have substantial impacts even on apparently routine and uncontroversial trials (Donovan et al 2002).

Qualitative research as a means to measure outcome

The use of qualitative research to aid interpretation of trial results also marks a significant milestone in the collaboration between trialists and qualitative researchers. Describing their research as "a multimethod approach", Glogowska and colleagues (2002) used questionnaires and interviews with parents of preschool children involved in a speech and language therapy trial, and combined these with data from the RCT. The quantitative trial results suggested that the trial had shown the intervention to be ineffective. The qualitative study demonstrated parents' perceptions of important advantages as well as limitations, and these, the authors felt, "could only have [been] surmised from the pragmatic trial alone".

The methodological lessons learned

It is inevitable that a body of evidence as large and as wide-ranging as the trials-related literature will contain research studies of variable quality. A focus on the different strengths and limitations is valuable as it can direct the course of future research. It is clear from even a brief perusal of the data that are available that trial participants often join a trial for personal and altruistic reasons. There are however far more useful insights such as the differences between trials viewed from a general perspective or one grounded in real experience. Realisation of some of the difficulties that trial participants can experience, the therapeutic misconception which can be at the heart of their decisions, and the lack of individual equipoise are all products of a much broader approach to thinking about involvement with trials.

It is important that research combines the strengths of a number of different elements of the literature, and opens new areas of exploration. Key lessons are:

- The use of appropriate research methods is crucial
- A focus on the microclimate of individual trials is both meaningful and useful
- The decision to collaborate, participate and not to participate should take into account the wider experience
- Unanticipated elements in the attitudes or experience of the individuals

involved may arise. Research should be responsive to this.

How these key lessons have in part guided the design and conduct of the research in this thesis is the subject of the following chapter.

Chapter 4 – The Current Study

The research findings reported here are part of a larger qualitative study of the views of parents and clinicians associated with four RCTs - The Study of Views of Participants in Perinatal Trials (SVPPT) carried out with colleagues, Diana Elbourne and Jo Garcia. As the material presented for this thesis is a subset of the data collected for the larger study, it is important to describe the background and overall progress of that research and to explain the reasons for the choice of data for analysis for this thesis. This chapter is organised chronologically, explaining four aspects of the research processes. They are:

- Origins and evolution of the research
- Study design and methodological rationale
- Design of the area of study selected for the thesis
- Progress and implementation of the study

Part I - Origins of the research

The focus, design and conduct of SVPPT were shaped by prior and contemporaneous research studies carried out by the same team. The first two studies conducted from 1995-7 offered critical insights into how emergency neonatal trials were viewed and understood and brought about reflection on the qualitative research process. They laid the foundations for SVPPT. The entire group of studies therefore represents an intellectual, ethical and methodological progression.

The ECMO qualitative studies - a developmental approach to researching participation in trials

Study 1

The first study assessed trial participation from the perspectives of parents of surviving babies involved in the UK Collaborative Trial of Extra Corporeal Membrane Oxygenation (ECMO) (Snowdon et al 1997). The ECMO Trial involved

critically ill neonates and compared two methods of life-support: 'conventional' management (CM) with ventilatory support versus oxygenation of the blood via an external circuit (UK Collaborative ECMO Trial Group. 1996). The research into the views of parents was carried out whilst the ECMO Trial was in progress.

Study 1 identified the difficulties that parents had in describing aspects of the trial. It was clear that even where aspects of the trial were familiar, with parents referring to "randomisation" or describing the use of a computer to determine treatment, they were often uncertain about the nature of randomisation and the rationale behind the trial. Some accounts involved common sense responses to gaps in knowledge. Where parents were (understandably) unaware of uncertainty as the basis for the trial, they could find other ways to explain why doctors used randomisation, such as to circumvent difficult treatment decisions or as a way to chose which baby should receive ECMO in the light of competition for scarce resources. Where the evaluative nature of the trial was unclear, some parents believed their baby was deprived of a *known* life-saving therapy. Allocation to CM could be taken to mean that their baby had been "rejected" and was not part of the trial.

Whilst it is now widely understood that such problems exist for trials in many settings, when these findings were first published there was very little available empirical data. Previously the main evidence came from a psychiatric setting and the extent to which the setting and associated illnesses had contributed to perceptions of trials was unclear (Appelbaum et al 1982). The first ECMO study indicated that trials in other situations could also be difficult to understand. The insights that were gained into the subtleties of some of the difficulties allowed the team to develop further research questions from a more informed position.

Study 2

Once the trial was complete, results were sent to those parents who had previously expressed an interest in receiving the findings. It is now more common to feedback results to participants (Di Blasi et al 2002; Fernandez et al 2003; Di Blasi et al 2005; Kenyon et al 2004) but at the time this was rarely the case. As there was no empirical literature to guide trialists the second ECMO study was conducted to assess parental

reactions to feedback. This was important as the situation was highly sensitive as ECMO was shown to be effective, saving significantly more babies than CM without increasing rates of disability. Mindful of the various models of trial participation which emerged through the first study, and the potential for the results to upset and disturb parents, it was clear that the second study could tap extremely difficult emotions and had to be conducted with care. The study was only possible because an important preparatory step had been taken through the first study. The team did however face a major intellectual and ethical dilemma which was difficult to resolve.

It was thought that parents of babies allocated to CM (the approach which emerged as the less effective arm of the trial) whose babies subsequently died, might be particularly affected by the results. With nothing to guide research in this area[17] it was difficult to predict the impact of some of the discussions required for the interviews. The team consulted widely with the trial staff and other researchers for opinions on whether the benefits to the research community, and in fulfilling any obligation we felt to offer bereaved parents the opportunity to give their views, could offset any potential for any distress which might arise. Whilst it was considered to be important to try to understand the parental perspective, it was eventually decided that it was inappropriate to include bereaved parents in such a difficult study when as researchers we had no access to support systems to offer any distressed parents, and when the research team was exploring essentially new and unpredictable research territory[18]. This second study therefore involved very careful exploration of the meaning that the results had for a sample of parents of surviving babies. It showed that parents largely valued their involvement in the trial, and particularly appreciated being informed about the results (Snowdon et al 1998). It also showed that it was possible to explore with parents their attitudes to complicated methodological issues (Snowdon et al 1999).

---

[17] Whilst research on bereavement more generally was available, it was the particular added element of the possible impact of trial participation on their experience which was the potentially complicating unexplored dimension of this situation.

[18] The ideal situation would be to include a follow-up study with the original trial funding application. Such a study would give feedback and would monitor trial procedures and would be conducted with the co-operation and support of individual trial centres. It could tap into either local bereavement support services at the referring hospital if appropriate and desirable, or could involve the funded provision of a counselor whose details could be given to parents as a form of support and further information, to be drawn upon subsequent to the interview if they wished.

The results of the two ECMO studies have been widely disseminated. A frequent (and anticipated) response from audiences, and in print (Braunholz 1999, Manning 2000), has been that the findings may have been different had bereaved parents been included. As researchers we were frequently called upon to defend the decision to include only parents of surviving babies. Although it was described as being based on "perfectly understandable ethical reasons" (Braunholtz 1999), it was clear that there was a need to understand the impact of trial participation on those who are bereaved, and to assess their experiences at the time and with hindsight. During the course of Study 2, it was decided that sufficient experience and understanding of the field had been gained to incorporate an assessment of the views of bereaved parents into further research. In 1997 funds were awarded by the Nuffield Foundation for SVPPT, a much larger project which extended the focus of the earlier work, and permitted inclusion of the views of two potentially quite difficult groups, bereaved parents and parents who had declined trial participation. Whilst the decision to include these groups complicated the research to an extraordinary extent, it also eventually resulted in a more coherent, and more ethically-resolved study.

Contemporaneous research - Study 3

A further ECMO study was conducted in 2001 with an additional group of health professionals and parents of surviving and deceased babies who had undergone hypothermia and ECMO in a pre-trial study (Snowdon et al unpublished). This research was carried out in response to an invitation by clinicians to examine their research processes. It took place during the course of SVPPT. Although it did not shape the design of the larger study, the process of conducting this research, and interviewing more parents with experiences of ECMO, including more bereaved parents, served to confirm and deepen our understanding of the parental perspectives at an influential time, that is during a period of analysis of the SVPPT qualitative data.

Part II - The Study of Views of Participants in Perinatal Trials: an evolutionary approach to research

The plan for the study

The original plan for this study was to examine involvement with perinatal trials for parents and health service staff. The aim, driven by the insights derived from the ECMO studies, was to gain an understanding of how the conditions established by individual trials shaped, and to some extent were shaped by, the attitudes and experiences of those involved (the microclimate). It was considered to be important to look at more than one trial as a central principle guiding the research was that all trials are not the same (although they have often been treated in the literature as if they are). SVPPT was to draw upon multiple perspectives to create a more sensitive and more rounded account of the trials. The sample of parents would include some whose babies survived, and some whose babies died, and could also be divided into those who had accepted and those who had declined trial participation. The professional sample originally involved neonatologists, neonatal nurses and midwives, but later developed to include obstetricians.

An unusually large number of interviews was planned to allow analysis of perceptions of individual trials from different broad perspectives, in the detail which is possible with a qualitative approach. This would also create subgroups which would be large enough to explore key areas of interest, namely bereavement and the decision to decline trial participation. The study was also to be of a size that would encourage exploration of unanticipated issues which might emerge in the course of the research.[19]

Although it was originally planned to take 27 months, SVPPT started in October 1997 and continued until July 2003. This major deviation from the initial timescale was a

[19] Precisely this opportunity arose with an assessment of reactions to the issue of perinatal post-mortems in a trial context, an unplanned and timely strand in the data. The issue was raised in one interview early in the study and was incorporated into the interview schedule. This focus was developed as some of the issues emerged in analysis and a small group of pathologists with links to the neonatal trials were contacted and asked to contribute to the study either through a telephone discussion or by submitting their views in an email format. As the UK climate became increasingly suspicious of both hospital pathology and research involving children, the value of such data became clear and this unexpected aspect of the data was written up for publication (Snowdon et al 2003a; 2003b; 2003c).

result of adaptations to both internal and external factors. The study was modified and enlarged in important ways in response to the unpredictable nature of the trials under study and to a number of difficulties which arose. The study period was lengthened as a result of changes to the design, but also to accommodate two periods of maternity leave (in 1999 and in 2002). In 1999 researcher hours were reduced from full- to a part-time basis, and in 2001 there was a further temporary reduction in hours to respond to the opportunity to conduct Study 3. As the research progressed, both funded and time-only extensions were awarded by the Nuffield Foundation to ensure realisation of the study aims.

Obstacles to progress and their impact upon the study

The obstacles which arose and the process of modification of the study design related to six main areas:

- The unpredictable nature of clinical trials
- Delays in securing research ethics committee approval
- Failure of some of the proposed research methods
- Access to bereaved parents
- Access to parents who declined to participate in a trial
- A sensitive political environment

The unpredictable nature of clinical trials

The initial plan was to examine two multicentre trials, one neonatal (The INNOVO Trial (Field et al 2005, Appendix B) and one antenatal (The Antenatal TRH Trial (Alfirevic et al 1999)). The TRH Trial was unexpectedly terminated after funding for SVPPT was agreed but before the study began (Brocklehurst et al 2000). The first modification to the study design was therefore to find another trial. Several trial teams were approached to identify an appropriate trial, with many meetings, lengthy correspondence and presentation of the intended research to a number of departments. Over a year later the CANDA Trial was brought into the study (Ainsworth et al 2000, Appendix C). As this was a neonatal trial the views of midwives were lost to the

study. There were however important advantages of incorporating this trial as recruitment, as for the INNOVO Trial, was carried out by neonatologists. It would therefore be possible to recruit a larger, more consolidated sample from one professional group than had been planned. A perinatal focus was preserved as assent took place antenatally for a neonatal intervention.

Delays in securing research ethics committee approval

Obtaining research ethics committee (REC) approval was far from straightforward (Appendix D). It involved an initial submission to a Multicentre REC as well as six local RECs. The process continued throughout SVPPT as agreement to collaborate was negotiated with different NICUs at different times. There were considerable delays as there were often several iterations as local modifications to study procedures were requested by clinicians and as changes to the recruitment process were made (see below). The chair of one REC refused to allow a submission to his committee for over a year. He argued that as SVPPT involved study of four trials (see below) it was in fact four separate studies, each of which should have separate MREC approval. The MREC disagreed. This impasse could not be broken and a valuable NICU appeared lost to the study. When a new chair was appointed, he stated support for a submission and SVPPT was approved. Lengthy negotiations with other hospital bodies such the Caldicott Guardians also took place.

Failure of a proposed research method

The initial design of SVPPT planned to tape-record the discussions between clinicians and parents in which trial participation was offered (Appendix E). The recordings would not only act as an important data set in their own right, addressing methodological concerns from the ECMO studies of how to know what parents were told about a trial, they were also the means to identify the study sample. Once a tape was forwarded to the SVPPT team, procedures would then be initiated to follow up the parents and staff who were present at the recordings to request interviews. This would create a three-way dataset comprising the recorded discussion (objective data), and parental and clinician interviews (subjective data).

Pre-funding discussions with the Steering Committee and staff associated with the INNOVO Trial suggested that there was enthusiastic support for this approach, but in practice there were severe difficulties. There were practical issues to contend with, such as the tape-recorders being unavailable when needed, and staff forgetting to make a recording, but the dominant problem was professional discomfort. Senior staff in some centres felt uncomfortable with requesting permission to make a recording at a stressful time, and were concerned over how to request permission to make a recording without revealing to the parents in advance the nature of the discussion that they were about to have.[20] Very few tapes were produced in the NICUs which did agree to this part of the study (4 tapes from the INNOVO trial and 3 from the CANDA Trial), and it became clear that attempts to generate further tapes were absorbing a disproportionate amount of researcher time and deterring other NICUs from joining SVPPT. The data derived from the seven tapes indicate that this approach is a very valuable source of data. Within this study it can however only be used as illustrative material. With the permission of the funders, this important element of the study was discontinued and so the second major modification to the study took place.

Access to bereaved parents

The third modification to SVPPT was made in response to extremely slow recruitment of an important sub-sample of the study, the bereaved parents. Although concern was expressed in the field that research that did not represent bereaved parents was fundamentally flawed, and there appeared to be support for attempts to assess their views, it proved to be extremely difficult in practice to secure support to recruit this element of the sample. From the start of SVPPT it was clear that there was concern that interviews could undermine the wellbeing of bereaved parents. The means by which potential participants were approached and invited to join the study was modified during the study in response to the concerns of RECs and to bring the practicalities of gaining access to the parents in line with local preferences. Some

[20] Essentially it was felt that in order to consent to the recording the parents had to be told that the focus of the research was discussion of clinical trial participation. As the subject of trial participation was often raised in the context of a larger discussion about the condition of a baby, the need to introduce the subject before it arose more naturally in the course of the conversation was thought to be too difficult by many of the neonatologists and to some extent artificial. The research itself would cause the conversations to take a course which they would not ordinarily have taken, thus acting as an intervention as well as a form of observation.

clinicians were very supportive and clearly wished to see the data in the public domain. They offered much support and advice. Others, however, had misgivings. One clinician advised colleagues in a meeting not to join as they might find themselves under media scrutiny once the results of the study were available. In some cases a collective decision was made to permit the study in a NICU, but individuals were uncomfortable and withheld access to bereaved parents once the study was underway and REC approval had been given. In one case the objecting clinician reversed his decision on further discussion but in another it was decided that no bereaved parents would be included from his centre. It seemed that this study aimed to provide the research data that everyone agreed was necessary but few felt able to support in practice. Whilst it was clear to all involved that SVPPT must not be to the detriment of the parents involved, ultimately these concerns limited the potential for the study to answer the research questions posed.

Access to parents who declined to participate in a trial

Although recruitment to the INNOVO Trial was far slower than the trialists had anticipated, there were very few instances of parental refusal to enrol their baby in the trial. Only four cases were identified at three hospitals during the interview period for SVPPT, none of which were at NICUs which were collaborating with the qualitative study. It was decided that every effort should be made to access these parents, even though a full REC application would be needed to carry out only one interview per centre. Each case was discussed with the staff involved with the hope of gaining permission to make contact with the family should REC approval be given. In three cases permission was withheld as the babies had died and the consultants in question all felt that contact would be inappropriate. In one case permission was given to approach parents who had declined for their surviving baby and a REC application was made. Approval was granted in due course but once the contact process was initiated the consultant realised that baby in question had a twin who had not been eligible for the trial and had died. As the parents were bereaved, albeit not in terms of the baby for whom they had made a trial-related decision, permission to make contact was withdrawn. As a result no cases of refusal for the INNOVO Trial were represented in SVPPT.

Senior clinicians at one of the CANDA Trial NICUs reversed their permission to recruit parents who had declined to participate in the trial after REC approval had been granted. Permission to approach refusers was given at two other CANDA centres and four interviews took place. As the possible sources of access were becoming more limited, another CANDA NICU was approached. Agreement to recruit from this centre was reached but shortly after REC approval was granted, with only one recruit to the trial from this centre and no cases of refusal, the CANDA Trial was unexpectedly closed to recruitment. This had the effect of curtailing access to new trial participants, as well as to the elusive refusers.

A sensitive political environment

An important issue which undoubtedly added to the sensitivity of the research, related to a difficult research climate in the UK. During the course of SVPPT two relevant areas of concern were raised, figuring prominently in the UK media. Firstly, there were governmental inquiries after revelations of the lack of consent for retention of children's organs after post mortems at Bristol Royal Infirmary (Bristol Royal Infirmary Inquiry, 2001) and Alder Hey Children's Hospital in Liverpool (Department of Health, 2001). Secondly, there were accusations (Hall & Pook, 1999; Wilson, 1999) and refutations (Hey & Chalmers, 2000) of misconduct with reference to consent for procedures in perinatal research in the CNEP Trial at North Stafford Hospital (NHS Executive West Midlands Regional Office, 2000). Whilst important questions were raised about research practices and ethical standards in relation to consent, it was also very clear that at the centre of these storms there were many families where individuals were deeply affected and traumatised by the events concerned. The research for the thesis was carried out as these difficulties were coming to light. It is of course impossible to quantify the impact that this had on the progress of SVPPT, especially as SVPPT researchers were not privy to the discussions in which clinicians decided about collaboration. It would seem likely that keen awareness of public scrutiny of the conduct of research with children, and of the sensitivity that would be necessary for any discussions on this topic with parents, is likely to have had a bearing on the caution of some clinicians over their collaboration with SVPPT. Although it was never stated to be the case, this may also have induced

the particular discomfort with the aim to include bereaved parents in the sample of interviewees.

Extension of the study

These difficulties meant that the team was obliged to make an important decision about the design of the study at a fairly late stage. The study could either continue as planned, with fewer total participants, or it could be extended to include further trials in order to consolidate the number of interviews and to attempt to achieve the goal of recruiting a sample of parents who had declined further participation. In discussion with the funders it was agreed to extend the study to include two additional trials, the Antenatal TEAMS Trial (Brocklehurst et al 1999) and the ORACLE Trial (Kenyon et al 2001i, Kenyon et al 2001ii). With the inclusion of these two trials, the study was returned to the original goal of comparing antenatal and neonatal trials. It was soon clear that the difficulties in trying to gain access to bereaved parents would again hamper, if not derail, this new element of the study. It was therefore decided that no further attempts would be made to access bereaved parents in the antenatal trials.

This decision to extend the study had both successes and failures. The extension in time which was permitted in order to recruit from the two new trials had the side-effect of actually increasing recruitment to *the neonatal trial* elements of the study. More recruits from the slowly recruiting INNOVO Trial gradually became available and it was possible to add to the CANDA Trial interviews over time. This allowed realisation of the target of recruiting a sample of bereaved parents via the neonatal trials. The small number of interviews with those who declined to participate in the CANDA Trial was augmented via the two antenatal trials. Both groups were however smaller than had been hoped as recruitment to the antenatal trials was yet again severely compromised. Recruitment via the TEAMS Trial was effective but extremely slow as the trial itself had few recruits. Recruitment via the ORACLE Trial was very disappointing, given the extensive and time-consuming negotiations which were involved. There were so few responses from those who participated in the ORACLE Trial that it became clear that this element should be discontinued[21]. As the

[21] In one centre approximately 25 letters to women enroled in the ORACLE Trial yielded one response.

TEAMS Trial closed to recruitment when further funds were not awarded, this element of the study also came to an abrupt end. This left the neonatal element of the study complete but less than half of the intended antenatal sample was achieved.

The final design of the study

In the initial years of the research there were many serious setbacks and without the flexibility to reshape and rethink the research design, it is likely that an important opportunity to examine RCT participation from multiple perspectives in a great deal of detail would have been lost. The fact that the study was adapted so radically has actually had an extremely positive effect on the overall design and coherence of the neonatal element of the dataset. The shift to carrying out the research part-time proved to be advantageous as valuable funds were not depleted at a time when the research process was impeded in so many ways and the trials upon which the study depended were recruiting slowly[22]. The increase in the duration of the study (through management of the funds, periods of maternity leave and agreed extensions) afforded the unexpected opportunity to follow the trials over time. It meant that generation of a larger, more sophisticated picture of the trials was possible, rather than a snapshot taken in the middle of recruitment. A very large number of in-depth interviews were carried out, mainly by one researcher and this would have been impossible within the original timeframe. What has resulted from a somewhat complicated evolutionary process is a unique and wide-ranging piece of research. To replicate a qualitative study such as this would be extraordinarily difficult. Figure 1 shows the final structure of the study, with a central focus for all groups on the decisions that were made about involvement in antenatal or neonatal trials.

[22] This includes a five month period in the course of SVPPT in which recruitment to the INNOVO Trial was suspended after an explosion in the factory supplying the nitric oxide.

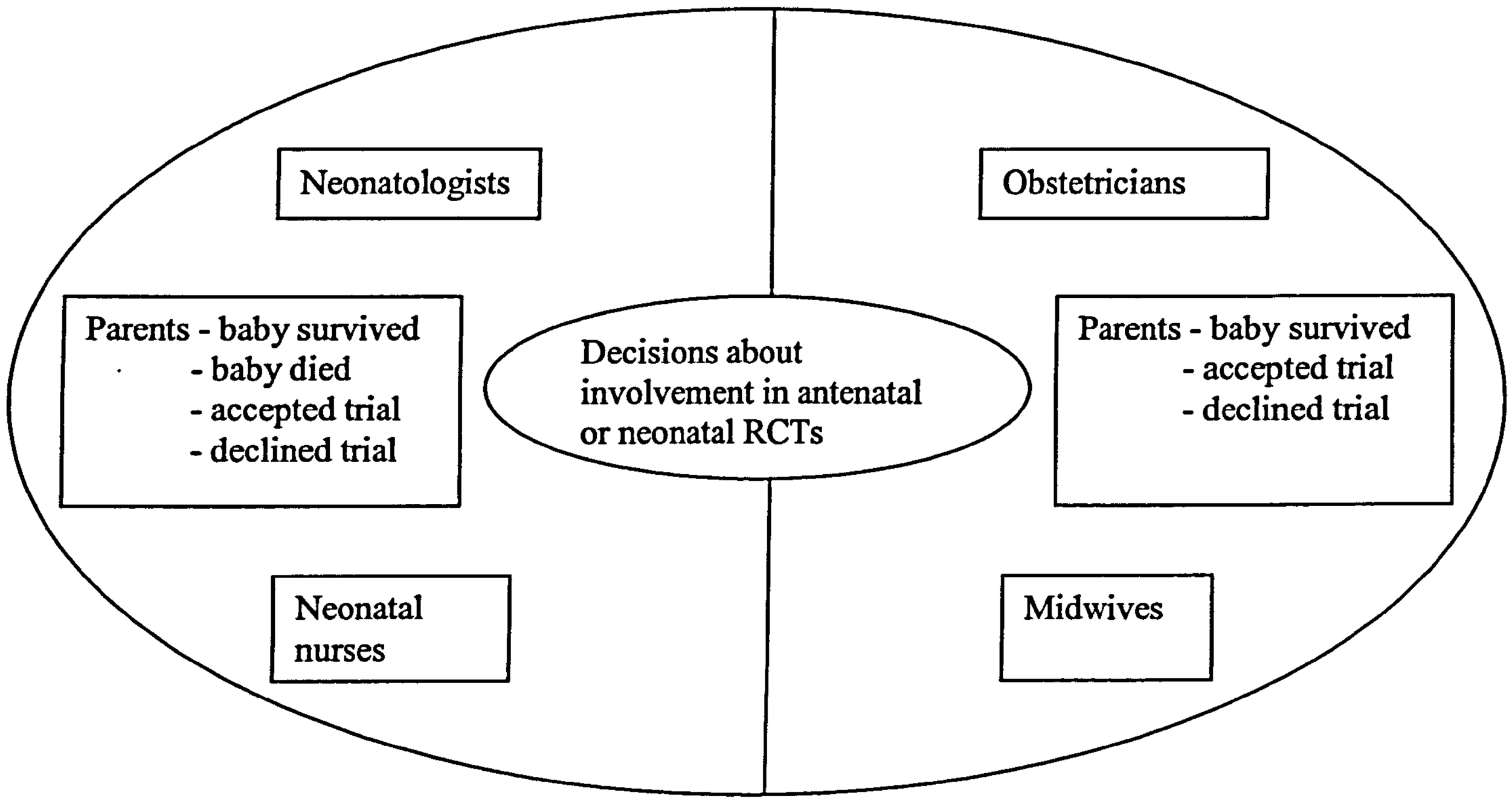

Figure 1 Structure of The Study of Views of Participants in Perinatal Trials

Part III - Selection of material for the thesis – the structure of the substudy

Neonatologists and parents

Given the size and the scope of SVPPT there were several areas which could have been explored for this thesis. The selection reported here focuses on the attitudes and experiences of neonatologists and parents associated with the CANDA and INNOVO Trials. It would have been possible to have selected a smaller area for study, such as the views of only one group, or a comparison within one trial. This much larger area was chosen as it offered the opportunity to examine in detail some of the issues which gave impetus to the larger study and is true to methodological insights gained from previous research (microclimates, multiple perspectives, comparisons between trials to understand similarities and differences).

The decisions that clinicians and parents make about collaboration and participation in neonatal trials are intrinsically linked and the selection of the accounts of both the neonatologists and the parents for detailed study offers the opportunity to explore their convergent and divergent experiences at what Chalmers refers to as "the front lines where uncertainties are encountered in practice" (Chalmers 2004). The connections between these two parties are important. For many patients in the broader trials setting, the choice to participate can be heavily influenced by their clinician's opinion (Mattson et al 1985; Henzlova et al 1994; Siminoff et al 2000). Stirrat (1992) argues that where a doctor does not support a particular trial, their patients will not be given the chance to participate. There are however very few examples of research which explores the relationship between collaborators and potential participants, either through direct observation, or through the interview accounts of the key individuals. It is now a well accepted principle that there are multiple perspectives on social situations, with protagonists each attaching their own meanings to information and events. It is therefore surprising that this influential dynamic, where it is likely that multiple meanings are attached to trial participation, is so under explored.

The data for the thesis were selected to allow exploration of the perspectives of the four groups individually and in comparison to each other as shown in Figure 2. Each

trial can be treated as a case study and examined alone, or in comparison with the other trial (A+D). The accounts of the neonatologists can be analysed according to their links with a trial (CANDA Trial neonatologists = B and INNOVO Trial neonatologists = E) or as one professional group (B+E). The parents can similarly be viewed in relation to a trial, in relation to their counterparts (C+F) or to the neonatologists linked to the same trial (B+C and E+F).

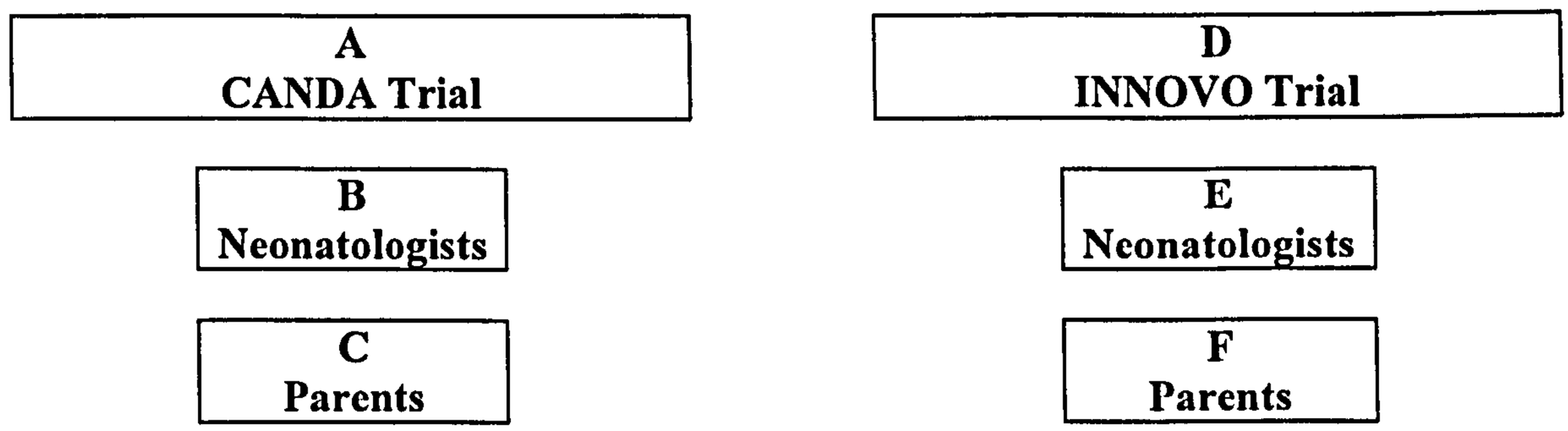

Figure 2: Basic structure of the research

Within this structure it is possible to look at an issue or event, such as the offer of recruitment, from different perspectives, assessing how each party's interpretation converges or diverges. It is also possible to look at how the perceptions or concerns expressed by one group may or may not be reflected in the other. If there is confusion in one group, the views of another might be explanatory.

The two neonatal trials which were selected for study had some common ground but also some important individual features which are described below.

The CANDA Trial

The CANDA Trial compared two surfactants given shortly after birth to preterm babies born between 25 weeks and 29 weeks and 6 days. One surfactant, Curosurf is derived from the lungs of pigs; the other, ALEC (Artificial Lung Expanding Compound), is a synthetic form of surfactant. At the time of the trial, both were commonly used to treat respiratory distress syndrome in neonates. As they had been shown to be effective against placebo in earlier trials, the aim was to detect small differences between the surfactants which may affect, for instance, length of hospital

stay and so costs associated with care. The trial could therefore provide information on which of two effective and safe drugs would offer the best value.

The intended sample size was 400 babies. Recruitment was carried out in hospitals in the north of England, between May 1998 and December 1999.

Key features of this trial were:

- the circumstances of assent and the likely condition of the babies
- the interventions that the trial assessed
- the course of the trial

Circumstances of consent and the likely condition of the babies

Where possible, assent for the CANDA Trial was sought by a neonatologist as soon as the likelihood of a preterm delivery became apparent. Written information for use at this point was provided by the CANDA trial team, although there were some local variations. A typical informed consent leaflet is shown in Appendix F. For some women who were in a stable condition there could be plenty of time to consider their options; for others a decision would be made in active labour. The condition of preterm babies on delivery is variable, with some needing ventilatory support and some less intensive care. At the point of decision-making, choices about the trial would be made in the light of the significant threat to the life and health of a baby, associated with preterm delivery.

The intervention

The CANDA Trial was often seen in the period of negotiation referred to above as a low risk trial with little to chose between the two efficacious and safe surfactants. It was known that Curosurf acted more rapidly than ALEC but not whether this actually conferred a benefit in the long term. Individual UK neonatal units tend to have a policy of predominantly, or exclusively using a particular form of surfactant. All of the neonatal units that elected to contribute to the CANDA Trial were routinely using ALEC. For 50% of their patients who were entered into the trial there would be a

shift from their normal practice to the administration of Curosurf as a result of the random allocation process. None of the UK departments that were routinely using Curosurf elected to join the trial. The different origins of the surfactants led to their description as "natural", and "artificial", an accurate but potentially loaded choice of terminology.

The course of the trial

During the period of the qualitative study, the course of the trial was affected in a dramatic form. It had been agreed from the inception of the trial that the data would be assessed when half of the intended sample was recruited. The data monitoring committee identified a surprising and highly significant difference in pre-discharge mortality between the two forms of surfactant. Overall, neonatal mortality was 11 per cent amongst those allocated to Curosurf and 25 per cent amongst those allocated to ALEC. The corresponding pre-discharge figures were 14 per cent and 31 per cent. The differences remained significant after adjustment for a number of variables and were consistent across all trial centres. The CANDA Trial was immediately stopped and ALEC was withdrawn from use by the manufacturer. The CANDA Trial was largely seen as low risk research and so this twist in the course of the trial was very unexpected. Questions relating to the trial results were incorporated into the remaining interviews as some of the interviewees reflected on the trial from a position of hindsight.

The final figures recruited to the trial were therefore approximately half the intended sample size, with 105 babies allocated Curosurf and 107 allocated ALEC.

The INNOVO Trial

The INNOVO Trial compared ventilatory support with inhaled nitric oxide (INO), to ventilatory support without inhaled nitric oxide for neonates with severe but potentially reversible respiratory failure. The hypothesis was that adding INO, a vasodilator, to the ventilator gases would reduce the risk of adverse clinical outcomes, and would be cost-effective. Previous research had suggested that INO may improve oxygenation in the short-term, but little reliable information was available about the

effects of its use in the long-term. The primary outcome measures were: (a) death or severe disability at the age of one year (corrected), and (b) death or the use of supplemental oxygen on the expected date of delivery (or 28 days post-delivery for the full or near term babies). The target sample size for the INNOVO Trial was 200 preterm babies (those under 34 weeks) and 110 term or near term babies (over 34 weeks), to be recruited by 2001, a recruitment period of nearly 5 years.

Recruitment via 32 UK and Ireland centres and 4 European centres started with a pilot phase in February 1997 and then carried straight on into the main trial. Shortly after this main phase started, an explosion in the factory supplying INO for the trial meant recruitment had to be suspended for five months. The MRC provided funding to extend the recruitment period for this time, allowing the trial to close five months later than planned on the 31st December 2001.

Key features of this trial related to:

- the circumstances of consent and the severe condition of the eligible babies
- the intervention that the trial assessed
- the trial design

The circumstances of consent and the condition of the babies

The eligibility criteria for the INNOVO Trial babies were deliberately broad and so it was expected that it would involve babies with a rather wide diagnostic and demographic range. Those eligible for the trial were already receiving ventilator support in a NICU and highly stressed parents were asked to consider enrolment in the trial days, or even hours, after delivery.

The intervention

The trial intervention is known to act very quickly and to have short-term benefits especially for babies born at or near term. Concerns about toxicity and the lack of evidence about efficacy in the long-term drove the trial. There are also some safety

concerns for professionals over repeated exposure to INO, especially for those who are pregnant.

The trial design

INO is readily available thus raising the possibility that it could be administered to trial-eligible babies outside of the trial, and to babies allocated to the control arm. The pragmatic nature of the trial and the restricted funding meant that it was not feasible to set up a placebo group and so the INNOVO Trial was not blinded.

Once the INNOVO Trial was underway, it became clear that the babies who were recruited to the trial were more sick than had been expected. Recruitment was very slow in spite of the low refusal rate. By the end of the trial in 2001, after almost five years of recruitment, just over half of the intended sample size was achieved with 108 preterm and 60 term or near term babies recruited.

Part IV – The implementation of the research for this thesis

Methodological decisions

A qualitative approach

The value of a qualitative approach as a means to gain an understanding of the complexities involved in the clinical trials setting was demonstrated in the previous chapter and borne out by the ECMO Studies. The use of qualitative research methods is highly appropriate for this context. Recently MRC, a major funder of clinical trials in the UK, highlighted the need for qualitative research to add to the evidence base in this area (MRC 2004). There are certain limits to the sensitivity of quantitative research methods (Green and Britten 1998) and the subject of interest here can require a careful process of unpicking perceptions and interpretations. For a study which is grounded in personal beliefs and extreme events, a qualitative approach is essential as a "means of exploring subjective experiences, meanings and voices" (Birch et al 2002). A qualitative approach is extremely valuable because of the adaptability and

responsiveness which are fundamental to this style of research, allowing the researcher to react to new insights as they arise, wherever they arise[23], incorporating them into subsequent interviews and analytical themes.

Focus and style of the interviews

In this study two interview styles were drawn upon, in-depth interviewing and narrative interviewing (Green & Thorogood 2002). In-depth interviews are also referred to as semi-structured interviews as they involve the imposition on the 'conversation' of a pre-defined framework (the interview schedule) by the interviewer. Unlike a structured interview, an essential feature of this approach is flexibility to respond to the various ways in which the interviewee reacts to the schedule, adding depth to a subject of interest, developing a theme and even refocusing and reorienting the discussion. This process of careful listening and following through a line of an interviewee's argument is part of the essential method of unravelling and connecting thoughts and beliefs. In narrative interviews, time is taken to allow the interviewees to piece together the 'story' of the events of interest to the research, adding detail, comment and reflection as they go.

The process of conducting flexible in-depth interviews is in itself a means to educate the interviewer, with each encounter revealing more than simply the responses to the interview schedule. Interviewees can do much to explain a phenomenon through the tangents that they take and the previously unconsidered issues that they raise. Their

[23] Reflexivity in research is a means to understand the impact of personal experiences and assumptions on interpretation of phenomena, and to foster awareness of one's position in relation to research participants (Doucet 1998). As my transition to motherhood occurred during the study, and interviews with some parents and neonatologists were conducted well into the third trimester, a reflexive position was almost inevitable, a far cry from the positivist approach of minimizing the impact of the researcher on the data. This was clear in interviews where parents saw me as being at the same life stage and were keen to talk about my pregnancy or children. It was very clear in my own responses when I visited a NICU, as I had done many times before, when 24 weeks pregnant with my second child. I experienced this visit on a number of levels. As a pregnant woman it was assumed by the staff that I was a parent and not a professional and my position felt very different from other visits (I was challenged about entry to parts of the NICU and was aware of being watched by others who were presumably wondering why I was in the NICU and what my 'story' was). As part of a ward round I stood by the cot of a baby recently born at 24 weeks gestation. The sight and emotion were familiar but additional elements underscored the complex relationship of researcher and researched. As a daughter of parents who experienced and lived with the death of premature babies I had insight into one potential future for the family. As the aunt of a young man who was profoundly disabled in his early months, I had could see another alternative future. As a researcher who had heard accounts of the birth and sometimes the death of many babies on a NICU, I placed the baby and family into my own intellectual frameworks. As a pregnant woman and mother I felt intensely sad and incredibly lucky.

behaviour, the views that they express outside of the interview, and aspects of their environment can all add to the interviewer's understanding of their situation. A particular element of studies which involve a comparison of the attitudes and experiences of different parties is to be mindful of the convergence and divergence between groups *during* the interviews. A high level of engagement with existing data allows new connections to be made in any encounter with an interviewee, and permits immediate response to insights as they occur.

Interviewing clinicians

The in-depth interview is a flexible tool which is well suited to gathering detailed data from clinicians. Unlike a questionnaire in which there are limits to the information that can be collected, the interview permits the interviewer to adapt to lines of interest as they arise and to develop new strands of thought. In this particular context this is very valuable as clinicians can vary in their approaches to the types of issues raised in this study. Senior academic staff can expect an interviewer to respond in an academic style, developing intellectual arguments as the interview unfolds. Others can be more experiential in style, some in the earlier stages of their careers having given less thought to the ethical issues raised by research. A particular challenge in this area is to find the means to connect for all interviewees with theoretical and scientific interests and to draw out views on the issues of interest to the research, but also to find appropriate routes into experiential elements which can shed light on practice. It is most important throughout the interview process to retain awareness of the potentially sensitive nature of research with clinicians and the ambiguities which some may feel about opening their own practice to scrutiny.

Interviewing parents

The two main issues which needed to be considered for the parental interviews were the sensitivity of the situation and the benefits and hazards of joint interviews.

A sensitive setting

Research in sensitive situations requires a careful, well considered approach (Lee 1993). The parental interviews for this research were sensitive in a number of ways.

Firstly they would involve potentially vulnerable people and every effort had to be made to offer them respect and protection, even if this meant accepting a degree of compromise in the data. Not only is information about trial participation embedded within the story of the birth and sometimes the death of a baby, the interviews would also need careful management because they involved exploration of the potential of the RCT for changing the parental experience. This could be in relatively small ways, such as satisfaction with information giving, or if there were similarities with the parents involved in the ECMO Studies it could be in explosive and life-changing ways, such as the feeling that doctors had denied a dying baby a potentially useful treatment. Murray (2003) has argued that although qualitative researchers are often discouraged by "the task of connecting with a vulnerable population and asking them to disclose information about a sensitive aspect of their lives", there can be important "therapeutic benefits" for interviewees. Having received positive feedback from many parents in earlier studies who have been interviewed on sensitive subjects (including non-trial related research), there is truth in this argument. It is however dangerous to consider this as a legitimation for such research and it is important to remain mindful of the need to guard against an overspill from interview to a counselling approach (Birch & Miller 2000).

Secondly it was important to be aware that the research interviews had the potential to change the parental experience. The ECMO Studies had shown that parents could use the terminology associated with a trial and appear to have a good appreciation of trial methods, but on further exploration could hold co-existing views which were at odds with the experimental rationale, such as feeling that their doctor influenced randomisation in some way. Care would be needed to explore parental views without interrupting their coping mechanisms, and without revealing information which might be difficult to integrate into their accounts of events, such as the random nature of the allocation. If parents felt greatly reassured that a doctor had selected the best treatment it would be inappropriate to deliberately introduce during an interview the role that chance had played in events.

Joint interviews – issues for data collection

A choice was made that invitations for interview would be addressed to the parents of particular babies. In this way parents would be free to choose themselves whether

they would be interviewed singly or jointly. The joint interview is a method which is said to lie "somewhere between individual in-depth interviews and focus groups" (Morris 2001). As the events that were considered at the heart of the research were events that in most cases had been shared, it seemed an obvious approach to take[24]. It is however a methodological decision which undoubtedly affects parental experiences of research and shapes the data which are generated and so needs further reflection.

Despite the potentially influential role of this means of data collection, the choice to conduct joint interviews has been considered by very few researchers. The views of the authors who have done so are largely convergent, each making the same points (Seymour et al 1995; Arkesey 1996; Morris 2001). They are therefore drawn upon below with no further reference to the individual overlapping points that each make.

Joint interviews have practical advantages as they may produce more accurate accounts than lone interviews. One partner may be able to supply details which the other has forgotten or was not privy to in the first place. Shared reflection may allow recall of important details which would otherwise be lost. Conversely it is inevitable that research involving joint interviews will in some cases highlight differences between the views of interviewees. When different views are expressed, this can be of particular interest to the researcher, but when differences in recollection of events occurs, this can complicate analysis.

It is important to consider that a joint interview does not simply produce a more complete story than would be achieved by two lone interviews. It produces a unique shared narrative, a construction that occurs only on that one occasion where the views of two individuals are put forward, exchanged and intermingled in such a way, that they promote or inhibit in the other insight, reflection, remembrances and even retractions. This shared narrative is a product of a relationship, a shared event, and of an artificial impetus for reflection, the interview itself.

---

[24] A shared experience does not automatically lead to the decision to carry out joint interviews. Researchers with a different approach may elect to interview each partner separately in order to preserve the independence of the views of each partner and to offer both members of a couple a clear opportunity to speak openly.

Joint interviews – ethical issues

When interviews involve discussion of intensely emotional experiences, participants may prefer to be interviewed with the partner who shared that experience. At difficult points in an interview they may provide support for each other, and an often quite natural process of turn-taking can occur, as one partner speaks while the other steps back from the dialogue to listen, reflect or compose themselves.

While interviews can have a therapeutic effect, and research participants can value the opportunity to recall and explore emotional events in detail, the situation can be extremely complex when two parties are involved, particularly if each has different emotional needs, especially in terms of the desire to revisit experiences. The data generated will be richer and will offer greater insights if interviewees are honest and open, but it is crucial that interviewers are aware of the responsibilities that accompany gaining access to the private world of a couple and turning it into data for public consumption. It is most important to retain awareness that the purpose of the interview is to gather data in an ethically sensitive, methodologically appropriate way, and not to consciously intervene in the emotional dynamics of a couple.

It is possible that the interview can act as a forum for revelations between partners of issues which have not previously been discussed, or of opinions which have not been articulated. Given a focus on a situation where partners are often protective of each other, it is not surprising to hear in interview phrases such as "What you didn't know at the time was ...." and "I didn't know that you felt like that". Whilst this can be very positive, it is also possible that interviewees may take an opportunity to ensure that their partner listens to their views. They may reveal a view in a supportive environment that they later regret (Duncombe & Jessop 2002[25]). The interview may be used as a means to expose areas of difficulty, with the interviewer either acting as a catalyst if discussion within the couple has been difficult, being an assumed ally if one partner articulates what they feel are the shortcomings of another, or as a safety valve if the presence of a third party makes it easier to bring up a difficult issue.

[25] Duncombe and Jessop make this point in terms of revelations between the interviewee and the interviewer, including recognition of previously suppressed emotions. It is however relevant to consider the possibility of revelations between partners which are made during interviews and cannot be retracted.

Data collection

The interviews with the neonatologists

Recruitment (Appendix H)

Neonatologists with experience of recruitment to the CANDA and INNOVO trials, or with a senior role in either trial, were recruited from five NICUs (A-E); one NICU recruited to the INNOVO Trial only (A), three recruited to both trials (B-D) and one recruited to the CANDA Trial only (E). A sample of 30 interviews was planned for this study to allow sufficient numbers to consider the professional experience of each trial, and to include some neonatologists with experience of both trials. To achieve this sample, 31neonatologists[26] were approached by letter or email during 1999 to 2001. As there was only one refusal, it seems that this is a highly representative sample of those involved in the two trials.

Details of the interviews

The age range of the neonatologists was 27 to 54 years (mean 37). The career stage is broadly categorised as consultant or non consultant, the latter including specialist registrars (N=12), research fellows (N=5), lecturers (N=2) and an ECMO intensivist. Basic features are shown in Table 1 and Table 2 gives details of career stage.

	CANDA	CANDA & INNOVO	INNOVO	Total
Consultant	4	4	3	11
non-consultants	5	6	8	19
Male	7	10	8	25
Female	2	-	3	5
hospital post	9	5	10	24
university post	-	5	-	5
Both	-	-	1	1
	19 CANDA			
		21 INNOVO		

Table 1. Basic demographic details of the sample of neonatologists

[26] A small number had moved on from neonatology in the time between their involvement in the trial and the interview. For ease of expression, and to reflect that at the time of their trial collaboration they were all working within neonatal intensive care, they are referred to throughout this thesis as neonatologists.

	CANDA	CANDA & INNOVO	INNOVO	Total
Consultants				
#2 (Head of Dept.)			✓	
#11		✓		
#14		✓		
#15 (Head of Dept)		✓		
#16			✓	
#19 (Head of Dept.)	✓*			
#22 (Head of Dept.)	✓			
#23	✓*			
#25 (Head of Dept)			✓**	
#28	✓*			
#30		✓		
	4	**4**	**4**	**11**
Non-consultants				
#1 specialist registrar	✓			
#3 specialist registrar			✓	
#4 specialist registrar			✓	
#5 ECMO intensivist			✓	
#6 research fellow	✓*			
#7 specialist registrar	✓			
#8 lecturer		✓		
#9 research fellow		✓		
#10 specialist registrar		✓		
#12 specialist registrar	✓			
#13 specialist registrar	✓			
#17 specialist registrar			✓	
#18 research fellow		✓		
#20 specialist registrar & research fellow			✓	
#21 specialist registrar			✓	
#24 research fellow		✓		
#26 specialist registrar			✓	
#27 lecturer		✓		
#29 specialist registrar			✓	
	5	**6**	**8**	**19**
	19 CANDA			
		21 INNOVO		

* Linked to the CANDA Trial but in a position to comment on the INNOVO Trial
** Linked to the INNOVO Trial but in a position to comment on the CANDA Trial

Table 2. Neonatologists' career stage and links to the CANDA and INNOVO trials

Conduct of the interviews

The interviews took place mainly at the place of work, either in an office or a private room, with the exception of one which was carried out by telephone at the request of the interviewee. With consent all interviews were tape-recorded and fully transcribed. They covered a wide range of issues relevant to participation in the trials and typically lasted an hour, a generous amount of time given the time pressures that many of the interviewees faced. Although they were often interrupted by telephone calls or queries from colleagues, there were no instances where the interviews had to be abandoned. The interviews were largely very open and frank. There was the occasional sense that some were guarded and careful about what they said. The interviews focused on their involvement with the neonatal trials, as well as their broader experience with trials more generally. The schedule included a number of areas which are addressed in the trials literature, such as informed consent requirements, or the use of randomisation or placebo, and it was clear that where doctors were familiar with the literature, they often relished the opportunity to discuss these issues. This resulted in interviews in which the majority of those involved had engaged and appeared to have given their considered opinion, as well as giving useful accounts of their personal experiences.

The interviews with parents

Recruitment (Appendix I)

The parents were recruited via the same NICUs as the neonatologists[27]. The aim was to describe approximately 20 parental decisions per trial. Based on the ECMO Studies it was thought that this would provide sufficient data to represent parental experiences in each of the two trials, and would give a large sample for detailed consideration of issues common to both trials.

At the start of the study, recruitment was based on access to lists of trial participants. The contact process involved an initial check with the consultant neonatologist who had responsibility for the baby. The family GP was then contacted for permission to

[27] This could deepen understanding of the views of each of the parties, as well as the interplay between them.

approach the family. This was considered to be an important safeguard against the possibility of making an inappropriate contact, possibly after another bereavement or a miscarriage, or in cases of parental depression. A letter was sent to the parents with a reply slip and prepaid envelope, to return if they wished to participate. For the bereaved parents it was judged important that the consultants involved in their care should have a greater degree of control over the process, given their concerns that bereaved parents should be approached very carefully. They were able to choose whether to ask parents if they would be willing to see a letter from the research team about the study, either when they met at a bereavement follow-up appointment, by telephone, or by writing to them.

As the study progressed changes were made to the Data Protection Act and it was necessary to adapt recruitment processes. As it was no longer permissible for researchers with no role in patient care to have access to identifying personal details, the recruitment process was necessarily handed over to the trial recruiting centres. It is therefore not possible to state the precise response rates as the actual numbers of conversations and letters sent to parents is not known, although the recruitment figures prior to this change suggested a response rate of approximately 50%.

Details of the interviews

There were 39 interviews involving 63 parents, most of which (33) were carried out by the author (see the Statement of Work). Nineteen interviews involved parents of babies enrolled in the INNOVO Trial, 18 in the CANDA Trial, and 2 in both trials. In one interview with bereaved parents of a baby enrolled in the CANDA Trial a tape was corrupted, leaving 38 interviews available for study. While most had agreed to trial enrolment, in 4 instances (all with surviving babies) the parents had declined to participate in the CANDA Trial. In a very small number of cases (4 INNOVO, 3 CANDA), parents had agreed to a recording of their discussion.

In 25 cases both parents were present and in 13 cases only the mother was present.

The 38 interviews involved 28 mothers and 19 fathers of 30 surviving babies[28] (N=47) and 10 mothers and 6 fathers of 12 trial babies who had died (N=16). The interviews took place on average 67 weeks after the baby was born (median 61), an indication of the time which elapsed between the events of interest to the study and the interview. There was however quite a variety of time periods in order to allow more parents to enter the study, and the number of weeks ranges from 48 to 149 for the CANDA Trial and 18 to 124 for the INNOVO Trial.

Table 2 gives details of the sample and the overlap between the trials, and shows the distinction between the number of interviews analysed (N=38) and the number of decisions that this represents (N=40). It also indicates the number of interviews with parents who accepted a trial (N= 34) and with those who had declined (N=4), and highlights the cases where parents were bereaved (N=10).

	CANDA	**CANDA & INNOVO**	**INNOVO**	
Accepted	13 (3 were bereaved)	2	19 (7 were bereaved)	34 interviews 36 decisions
Declined	4	-	-	4 interviews 4 decisions
	17	2	19	38 interviews 40 decisions
	19 CANDA			
		21 INNOVO		

Table 3. Basic details of the sample of parents

Further parental details are given in Chapter 7 in discussion of the circumstances of their decisions about the two trials.

Conduct of the interviews

The interviews with parents were carried out in the parental home. All were tape-recorded with consent. The parents often went to some lengths to accommodate the interview, arranging work or childcare to allow both parents to be present, or to allow time to talk without interruption.

[28] As the sample includes parents of twins and triplets the number of babies is greater than the number of parental interviews.

The interviews involved detailed discussions of personal stories, through pregnancy, and the birth and sometimes death of their babies. Involvement with a trial was embedded into this story. The parents were afforded as much or as little time as they wished to recount their experiences and give their views. The interviews were in depth and semi-structured with a high level of flexibility and also drew on a narrative interviewing approach. They were designed to promote a full and reflective account of a trial, whilst allowing parents to feel that they adequately represented their story.

In some instances there was some disparity for couples in their inclination to discuss events, for instance some fathers could be present but appear to be disengaged with the subject. As the interviews moved on they were often drawn in by the subject matter and began to participate. The interviews could involve discussion of very emotional events and it seemed that the parents had steeled themselves to revisit these experiences. For some this was a very welcome opportunity but for others it could be met with mixed emotions. In all interviews it was made clear that if there were any areas that parents did not wish to discuss, then they should indicate this and the interview would move on or end. Similarly if emotions ran high, parents were always offered the chance to stop or to discontinue the interview. Whilst some did chose to stop, sometimes for a cigarette, a tea-break, or simply to pull themselves together without the tape-recorder running, none chose to end the interview. A brief questionnaire was left with parents which in part assessed their views of the interview and the impact that it had had on them. Although some, not surprisingly, indicated that they had felt emotional, none would have preferred not to have taken part.

Data analysis

As indicated earlier, the direction of the research owes much to the experiences gained through the ECMO Studies. Many of the lines of questioning that were set in the interview schedule about their decisions about involvement in a trial, and their perceptions of the implications of their decision, were influenced by pre-existing perceptions of what was likely to be important, derived from this prior experience. The interviews were also to some extent theory-led, taking their direction from the existing theoretical and empirical literature. There were many issues which arose in

response to the direction of the interviewees, and insights which only occurred at the point of detailed analysis.

In his "adaptive theory", Leyder argues for the value of these different elements, including the role of pre-existing researcher knowledge and concepts (Leyder 1998). In contrast to a grounded theory approach, where data are given absolute primacy and from which themes are said to emerge, Leyder suggests an approach to analysis in which existing models are adapted in a process of modification and refinement as experience and understanding of a phenomenon grows.

In accordance with Leyder's approach, throughout the study, initial lines of questioning were developed in interviews as new lines of information were introduced by respondents, and then explored in analysis. Analysis of the fully transcribed interviews involved reading and re-reading the interview texts and the application of detailed codes and broader over-arching code families, based on a mixture of the interview schedule and insights gained from the interviewer's experience of the interviews. The codes were expanded and collapsed as interviews were processed. Eventually no new codes were introduced and it was judged that the data had been adequately explored. This process was assisted by a textual analysis computer package, ATLAS-ti (Muhr 1994).

The analytic process is not, however, simply an act of textual analysis. It is part of a larger process which has been carried out over the course of the study in which the views of the various interviewees take their place. The interview accounts are strung together as pieces of evidence (the most important pieces of evidence), along with insights gained from meeting the trialists, visiting NICUs, attending steering committee meetings, reading trial material, negotiating the research with clinicians and informal discussions outside of the interviews, all of which give a broader and a deeper sense of the trials. In keeping with this approach the interviews and analysis did not simply focus on a limited series of questions, but drew on a very wide range of the interview data to explore how the interviewees think about the trials, and to promote further understanding of their every-day clinical and personal worlds.

Chapter 5 – The decisions that neonatologists make to collaborate with a trial

Organisation of the data

In Chapter 1 it was argued that there is a distinction between how trials are viewed as an abstract principle, and how actual trials are viewed in practice, suggesting two possible levels of thinking about trial collaboration.

The process of conducting the interviews with the neonatologists suggested that their decisions about collaboration were indeed highly complicated. Data analysis made it clear that there were a number of important influences shaping professional responses to the CANDA and INNOVO trials. As these various factors were unpicked, the degree of complexity became more evident, and four levels of decision-making about trial collaboration were identified in the data. They are:

- Level 1 - Individual collaboration in principle
- Level 2 - Local collective collaboration in principle
- Level 3 - Local collective collaboration in practice
- Level 4 - Individual collaboration in practice

Once this structure was identified it was possible to organise the wider data which pertain to the forces which shaped professional decisions around these four. The levels are explored below with reference to the decisions that were made to collaborate with the CANDA and INNOVO trials. The decision to suspend collaboration is explored in the following chapter.

Level 1 - Individuals in principle

Before considering how the neonatologists viewed the two trials, their general view of trials-based research is presented. This broad view gives an indication of the principles they hold about research when separated from the specific conditions

created by particular trials, and gives some background to their approach to the INNOVO and CANDA Trials. It serves to build up a picture of the individuals who combine to work as a collective in relation to trial collaboration.

The neonatologists readily expressed their views on research, with many spontaneous comments as to why, in principle, they felt that collaboration is appropriate. None stated opposition or disregard for trials at this level. The factors which have been shown by several studies to be associated with support for trial collaboration were clearly identifiable, that is: the value of research for medical advancement, for its potential to benefit future populations and for advantages which might be gained by individual participants. As these factors were heavily interrelated in the neonatologists' accounts, their views on the value of trials are described under two headings which together encapsulate these three areas:

- Advancing medical knowledge and improving patient care
- A means to balance risk and benefits for populations and for individuals.

Advancing medical knowledge and improving patient care

Almost all of the interviewees spontaneously mentioned the value of trials to advance knowledge and to improve care. Consultants and registrars alike were supportive of a research culture and made many simple statements such as: "I think we have a collective duty to take part" (Int.2 registrar[29]), "I think trials are critically important" (Int.9 registrar), and: "I believe research has a very important part to play in the medical care of babies." (Int.11 consultant).

For some contributing to research was not simply a role that they took on from time to time, but an intrinsic part of how they worked and how they saw their position as doctors. The sense of making a personal contribution to the process of generating and implementing findings of value in their own field could be very gratifying.

[29] Refer back to Table 2 for details of the links between individuals and the trials for which they acted as collaborators.

> I would like, at the end of my career, to look back and say I've initiated this, I've planned that and I've participated in these other things that other people have planned. Because unless we do that ... nothing will move forward. So very consciously I would wish to be involved in this sort of thing, and if I worked in a different type of hospital I'd still be angling to participate or looking at ways in which I could initiate studies that would take paediatrics forward. (Int.28 consultant)

> I enjoy my job but I do enjoy research and I feel that research is very important. Good research is the only way to improve care. There's too much bad research published, and unfortunately a lot of the kinds of questions that we have ... can only be answered really by controlled trials. There's too much anecdote and review and personal opinion that just muddles the whole thing. So I'm very happy to [collaborate]. I enjoy being involved in research (Int.13 registrar)

Many of the neonatologists had engaged with a range of issues relating to trials. The semi-structured nature of the interviews allowed discussions to take various turns away from the interview schedule and the neonatologists frequently talked at length about their own areas of interest. Some raised ethical issues; others mentioned procedural questions such as when to stop a trial, or who should have responsibility for recruitment, and some discussed sample sizes, bias and questions of trial design.

Their own reliance on the evidence base for neonatal intensive care made them particularly supportive of the value of advancements through research.

> I think it's important to get involved in trials ... because that's the only way to advance things. [Paediatric] oncology is a perfect example as to [how] that has happened. On an intellectual level I find it very interesting and satisfying. I also find that trial results and the Cochrane Database is a very good knowledge base to work from, so that most of our guidelines are based on randomised trials. (Int.23 consultant)

> I don't have any qualms about [asking parents to take part in research]. I feel quite good. With all this evidence-based medicine that we're moving into, that is the only way that we're going to get better and it is not enough to say, "In my experience this is better, in my experience this is not good." So I know that this is the right thing to do. (Int.9 registrar)

Awareness of the need for information, and acknowledgement of one's own position in relation to a gap in knowledge, is an important prerequisite to trial collaboration. This was a fundamental principle which was referred to in many interviews. In an interview with a consultant a question about trials-related limitations on clinical

freedom elicited a response about the ability of trials to prove good quality evidence as a foundation for care.

> I've never been very impressed with clinical freedom because it implies that ... what there is to know about medicine and caring for babies is already known. I think ninety-five percent of what we do is groping around in the dark without really knowing what the right answer is. I'd be much happier to be part of a clinical trial and try and get an answer, than not be part of a clinical trial and ... pretend that I know what's best for a baby without having the evidence base to back that up. ... Other people would say "I can tell in a particular baby whether this is going to work or my experience is this." Now I would equate that with anecdotes which come right at the bottom of the pyramid of evidence. Other people would say that's clinical experience. ... I think there are constraints on your clinical freedom, without a doubt. Whenever you sign up to a trial it's a compromise. You may not treat babies exactly the same way [as you would have done outside of the trial] but you're prepared to compromise because you feel that the potential benefit, the results of the trial, outweigh these minor differences in clinical management and constraints of your clinical freedom. (Int.25)

A sense of the importance of medical advancement could lead to great enthusiasm for research, to a point where parental refusal to participate could be disappointing. This was true for those contributing to multi-centre trials as well as for those who were more intimately involved in running their own smaller local trials.

> In terms of helping us all know what are the best treatments for the babies, [refusal] bothers me because I want to get as many patients as possible, but on an individual level I would never think badly of one parent or another for not consenting because ... I can understand their way of thinking. ... (Int.29 registrar)

> The first couple of times it happened with my trial ... I was personally offended. I went off the unit and I was really pissed off. ... I was actually sort of upset because I took it as a kind of personal slight almost, that there must be something about my manner. ... I thought "Why? Why did they not do it?" (Int.13 registrar).

The fact that the neonatologists were so positive about research in principle did not mean that they did not express concerns. Recognition of the possible tension between the needs of research and the needs of parents was common, a source of a degree of anxiety which was often detectable in the interviews. The neonatologists were keen to emphasise their respect for parents, and, as with the registrar (Int.29) quoted above, they wished to emphasize support for their right not to participate. Their principles about collaboration were often presented in conjunction with their principles about care and relationships with patients and parents.

> If I feel the study is important, either for that patient specifically, or more generally it's an important question which could have a significant effect on other parents, or other patients, then I feel that it's a very important thing to do. ... I feel it's very important to give that possibility to the parents to participate, but on the other hand if they say no I respect that, I respect that very very much. (Int.6 registrar)

> I think if parents don't want their children to be in trials we must accept that and be very careful that we treat them in exactly the same way prior to the discussion about consent and after. The parents must not be bullied into doing it. I think at the end of the day it will do our profession, a great disservice. (Int.16 – consultant)

Although there was a sense in many interviews of difficulties which can underlie trial collaboration, where principle-driven concerns were expressed[30], such as whether truly informed consent is possible, or over difficulties in defining personal equipoise, it was rare for these to supersede the value of trials in principle. One interviewee stood out as being very discomforted by the processes involved in neonatal trials. He described recruitment as "really difficult" several times, but still felt that trials were important, however hard he found them to implement. Although his view of trial collaboration was indicative of a problematic relationship with the role of researcher, he was still supportive of trials-based research, albeit with a certain degree of resignation.

> I think, you know, trials are a necessary evil for the benefit of the greater good. Once you start them you have to see it through. You can't be allowing yourself to be swayed by what is probably emotion (Int.24 registrar)

Just how trials were thought to advance medicine was also of interest. There was a keen awareness of the difficulties which can ensue when treatments are unevaluated. Whilst the knowledge gained through trials-based research was sometimes described as a process of incremental steps, with several neonatologists alluding to the advances in treatment of paediatric leukaemia, the interviewees were also very aware of trials such as the UK Collaborative ECMO Trial, where results can shift practice overnight. Occasionally another view was expressed which reflected a model of trials which was also present in some of the parental accounts in this and the ECMO qualitative studies. Here trials can be carried out to provide data to support what is already known but is in scientific terms unproven. In referring to an actual trial comparing two commonly used interventions, a registrar argued that she felt it was clear what the results would

[30] as opposed to practicalities, such as the time that it takes to go through informed consent processes.

show. It was essentially an exercise in validation which necessitated withholding treatment A from half of the patients.

> I had my own feelings about that because I've always used [treatment A] but then you are trying to get equal numbers [for treatments A and B]. If you are involved in something like that you need to get the numbers to prove what you're saying. (Int.21)

A means to balance risks and benefits for populations and for individuals

According to the Theory of Broad Benefit, randomisation ensures a fair distribution of possible benefits as well as risks. There was a strong sense in many interviews that the neonatologists were aware of, and drew upon debates in which potential benefits and risks were weighed against each other.

The notion of medical advancement, as described above, is clearly of benefit to populations generally, and valued by the neonatologists, as disease can be better understood and more effective treatments can be utilised. An important issue for trials-based research is whether or not these advancements for patients of the future are made at a cost to some of the individual participants involved, a central concern in the Theory of Limited Benefit. When the neonatologists were asked whether they felt that there was competition between the needs of individual participants and those of future patients, responses were often framed by equipoise and the null hypothesis.[31]

> If you feel you are in equipoise then you presume that there's going to be no direct benefit one way or another to the baby, because which ever they get, as far as you're aware, they'll be getting the best treatment that you know about. Any difference that might be shown will be of use to future babies (Int.6 registrar)

> I suppose on occasion when I've got consent and parents have asked me "Will this be helping our baby or is it intended for babies in the future?" it's easier with an intervention trial because then you can say, potentially if you got a treatment and in the future it was proven to be beneficial then it will have helped your baby but you can't guarantee either that they will get the treatment or that the treatment will be effective, so there's that uncertainty. But what I try and tell them is that even if they were in the control group that didn't get any treatment that information would

[31] The null hypothesis assumes that there is no significant difference between treatment arms. A trial measures any departure from that hypothesis.

still be very valuable. It would not perhaps help their baby but [could] help babies in the future (Int.25 consultant)

An obvious benefit which might have been expected to feature prominently in the neonatologists' principles about trials is the potential for benefit through accessing an experimental treatment. Although this was discussed with reference to practice (defined here as Levels 3 and 4), when considering the benefits of trials generally (Level 1), there was little suggestion that babies may benefit directly by accessing an experimental treatment. Where this was mentioned, it was often minimised, almost a by-product of the research process. The comments of a consultant below are quite typical.

> The whole idea of doing studies is to try and benefit people for the future. I mean that's what we study things for, to try and advance medicine. Well it's not going to affect anyone in the here and now, it's going to be for the future. .... That will always be the driving force I suppose, but hopefully along the way you may benefit a few people as well. But again it depends on your way of approaching these trials. If you think well this is going to benefit my patients, then I think you ethically may have a major dilemma to face because should you really be entering people into a trial who may not get that treatment. If you are already convinced that it's going to help them, that's a problem. (Int.11)

There were ways in which the interviewees presented trials as beneficial for participants. Several mentioned the phenomenon of improved outcome for trial participants, regardless of allocation, when compared to non-participants. A consultant who stated that "being involved in a trial itself is beneficial" explained why he felt that this is so:

> People get spoken to more, parents are communicated with more, data is monitored more rigorously, patients are thought about more, perhaps more clearly in some ways. (Int.23)

Almost all of those referring to this phenomenon felt that it would be inappropriate information to give to parents who were considering enrolling their baby in a trial as it could be seen as coercive. It was therefore generally viewed as something to guide professional decisions about collaboration and not parental decisions about participation.

> What I wouldn't say to parents, but I would say if I was giving a talk about this, would be there are studies that show just being part of trials is beneficial. ...Even if parents were to consent and not get treatment [*that is they are allocated to the*

control arm] their babies are probably looked after better just by the process of whatever goes on around the periphery of trials. (Int.25 consultant)

The benefits described above have actual tangible effects, measurable as outcomes for individuals. The neonatologists discussed other types of benefits which were more complicated, such as protection from possible risks. These benefits could pertain to individuals or to populations. In their simplest form, trials were thought to limit the chance of side-effects to one portion of the participants, those exposed to the experimental intervention. A consultant argued that restricting the number of patients exposed to an unevaluated intervention offered protection to those within the trial, and protected those outside the trial from any risky exposure should an intervention be used without evaluation.

> It is my duty to expose as few people as possible to the experimental treatment, for fear of the unknown side effects. ... The randomised study is a protective strategy, it protects you against unknown side effects. ... [It] protects the population at large from [exposing] large numbers of children to a ... treatment that has unknown side effects. It minimises the number who will suffer the side effects. (Int.22)

There was a small number of interviews in which the idea of benefit through protection was extended to future populations who are spared risks inherent if treatments are adopted without evaluation. Two consultants mentioned the use of increased levels of oxygen for preterm babies as an example of harm which occurred in this way.

> Fear of the unknown is a very right situation, we should all be wary of the unknown. ...We have only to remember oxygen. ...These were the mistakes that were made and if there's one thing we should learn from them it is that we must do good studies early on, otherwise we can do terrible harm to a great number of patients. (Int.28)

> If they had bothered to randomise ... high and low oxygen in premature babies in the fifties then there would be a hell of a lot less of them running around blind. ... I mean people look upon randomisation as just refusing certain people the new-fangled, obviously better treatment, but it's often protecting them against the unknown side effects of the new-fangled treatment. (Int.22)

A more complicated way of thinking about risk was put forward by the only neonatologist who felt that it *was* appropriate to inform parents about the possible benefits of trial participation. In his argument these potential benefits counterbalance the potential risks involved in the trial situation. The risk focused on here is the

possibility of *not receiving* what with hindsight proves to be the superior treatment. This provides part of his own ethical framework in which he considers trials and guides the ways in which he deals with parents.

> I'm very conscious of the trial entry effect, which means that any baby in any kind of study or trial, on the whole does better than those not entered. Now, this is well established in so many different fields, that it makes me feel totally comfortable with the idea that one isn't compromising the baby. ...What may be lost by taking what turns out to be the inferior treatment is gained in some measure by the fact of participating in the study at all, because we know that outcomes are better when you participate rather than if you don't participate. ... It always seems to me that there should be an explicit trade off. If you are asking anybody to participate in any kind of study I think they should always get some kind of extra kick-back ... the sense that they're getting more attention, there's something else going on as well, there's some other benefit to them from saying yes than just the knowledge that they're contributing to future knowledge. (Int.28 consultant)

The possibility of receiving "what turns out to be the inferior treatment," is an enormously important issue when considered in the context of trials involving individuals at the edge of life. Where mortality is a very likely outcome for a substantial proportion of a trial population, the allocation made may mean the difference between life and death; where morbidity is an important issue, it could affect physical and mental ability and future quality of life. In a particularly frank and sombre comment, a registrar with a lot of research experience argued that the people who decide to participate in such trials are taking on a risk for their fellows.

> What you're asking them to do is to make a - (long pause) - is to enter a world of great uncertainty for the benefit of society. You're asking them to be guinea pigs in the nicest possible way, but still to be guinea pigs. ... I think you're asking them to be hostages to fortune really. It's a big thing. Huge! (Int.24)

Level 2 - Local collective collaboration in principle

Before an individual clinician can collaborate with a trial, a higher level of decision-making takes place in the department, centre or unit to which they are attached. The process of becoming a trial centre, where there is an undertaking to recruit patients to a multi-centre trial, involves consideration at a local level. The NICUs which were involved in this study had each been through a process of internal consultation which

led to a decision that they would co-operate with recruitment to the CANDA[32] and the INNOVO trials. This focused on whether the proposed research was scientifically and ethically robust, and whether it was workable in their local setting. Whilst consideration of feasibility includes questions of practicality, in this section it is considered in terms of the broader issue of how those involved thought the trials should be implemented.

The consultation process

The nature of that consultation process seemed to be broadly similar in the different neonatal units, it being consultant-led. Three consultants describe this collective approach to decision-making. A consultant from NICU C indicated that decisions over whether or not to collaborate with a trial can be clear and unanimous.

> It is partly personal and partly a group decision but a good example was [a particular trial] ...We didn't like that protocol. We did not feel that we could stand and defend it with our patients. I don't know that we quite went as far as thinking it was ethically dubious, but perhaps that's saying the same thing as I couldn't defend it to my patients. Anyway, the bottom line was none of us felt we would be prepared to be involved with that so as a group we didn't become involved. (Int.28)

This shared element of the decision to collaborate seemed to be very important. Another consultant from NICU D indicated that their discussions are well debated in order to secure a unanimous agreement.

> We've always had a policy where we decide as a group. We don't always agree, but this is a situation where compromise is important and there'll be some given and take. When people feel strongly then we tend to give in and go along with the consensus view, and if you feel strongly, similarly you are obliged to back your own view up with some evidence and other people will hopefully give way. We like to do things as a consensus group. (Int.25)

A consultant from NICU A argued that it is important that they take a common responsibility for the decision to collaborate with a trial. As they represent a wider group of colleagues who would be required to act in relation to their agreement to recruit to a trial, it is important that within their consultant group a decision is sound and undisputed.

---

[32] In the case of the CANDA Trial it should be noted that it was developed and co-ordinated through a small number of NICUs and so some decisions were about development as well as collaboration.

> I'm very fortunate in that as a consultant group ... we have one meeting a month that is dedicated to potential research topics and audits. So if as a group we want to conduct a research project or are approached about a multi-centre study we would discuss the protocol at that meeting. We have discussed over the last year some protocols that we have thought were unethical, and have decided as a department we would not enter babies into that trial. I think we [have to] have corporate responsibility. ... Because it needs different people to recruit at different times I think we have to have that corporate agreement that the trial is ethical and we should be randomising children into it. (Int.16)

A similar point was made by another consultant from a different neonatal unit (C).

> Unless we were all moderately happy that that was appropriate [we would not join]. If some people felt rather neutral ...then we might all go in for it. But if one person had very strong views for whatever reason, then we wouldn't join in. ... As a department we'd have to [opt out] otherwise it would be far too confusing. (Int.19)

This departmental rather than an individual approach avoids the situations where an intervention might be randomised for patients under the care of one consultant whilst could those under another consultant could receive the same intervention as a standard approach to care. This can be confusing for staff caring for the patients, giving very mixed messages about equipoise, care and research, as well as for any parents who could be aware of the disparity.

The terms of collaboration

The issue of local feasibility was an essential issue for most consultants who felt it to be important that trials are achievable given local circumstances. A NICU B consultant explained:

> Certainly there's a lot of in-house discussion ... to decide about which trials we'll take part in. We don't like taking part in a trial where we don't recruit. It's very easy to say, "Oh, yes, we'll do that", and then be hopeless at recruiting, and we're very aware of that. We try and pick trials where there is a genuine interest, and we think it's feasible for us too; some of the processes are very complex. (Int.15)

Once the collective local decision has been made that a NICU will collaborate with a trial, there can be further issues about implementation which are also worked through collectively. These relate to how a trial is managed locally, and can involve modification of the protocol, either formally or informally. A consultant at NICU E

explained how a local modification occurred for the ECMO Trial as it was considered important within his unit that any baby that they recruited should be referred on for more specialist forms of care, regardless of allocation.

> Dr #22: Because it depended on a failure of your current therapy, pretty much ... - we said we will [recruit] them to transfer to [a specialist centre]. So we randomised them to the ECMO study and that decided which of two hospitals they would go to. The ones who were randomised for ECMO would go to [one hospital] and the ones who were randomised to get conventional treatment would go to [another]. ... It felt like something was happening and indeed it was, I mean there were other [facilities] available that we didn't have at that time.
>
> CS: Yeah. Certainly for the ECMO parents I have spoken to, it was incredibly difficult [when the baby was allocated to the] conventional arm and nothing changed.
>
> Dr #22: Well, that's why we did not accept [it], you know, we agreed to enter them into the study on the condition that they transferred out from here to one or other of those hospitals, because that seemed to be the only logical approach from the parents' point of view, that something changed, when things got difficult.

Whilst this consultant presented a local policy which was agreed upon with the trialists, there were other ways, some of which are dealt with in greater detail in the following chapter, in which informal local modifications may have shaped recruitment patterns for the trial and events for individuals. One senior consultant indicated that problems which he felt were inherent in the INNOVO Trial design had led to a decision to collaborate but to informally[33] redefine local entry criteria.

> [I am] certainly in equipoise about the long-term benefit of nitric but what I'm not persuaded by is the methodology of the trial, simply because everybody has different thresholds for entering babies and it's a mess. I tried to get round it by actually defining a threshold within the unit (Int.19)

Another consultant from a different neonatal unit indicated that there was also an issue of thresholds for entry to the INNOVO Trial in his unit. He was asked how those recruited from his NICU had fared.

> Most of them died probably because we'd got a very high threshold of disease severity before we randomised them. We've changed that recently, we've brought

[33] i.e. without negotiation with the trial team.

that down because a lot of them died, so we were intervening too late with whatever intervention. (Int.25)

Level 3 - The local collective collaboration in practice

The collective approach was seen by the consultants as a positive and consensual decision-making process. It is the means by which a unit's most experienced and informed doctors take responsibility for accepting, rejecting or redefining the terms of equipoise on a local basis, and indicate to their colleagues that a trial is of an appropriate standard and worth. An interview with a registrar indicated that the assessment of trials at a senior level, especially if it was seen as a rigorous process, could be reassuring for the less senior staff.

> You know this is well validated or it's been exposed to a number of consultants who agreed that that study design is very sound. And certainly on this unit with the number of consultants involved and their differing views on so many things they wouldn't be reticent about criticising a study design. (Int.18)

Once a collective agreement to collaborate has been made, and local standards have been established, the broader group of clinicians within a NICU are required to act in accordance with the undertaking to recruit patients to a trial. It was sometimes, although not always the case, that the most senior neonatologists were infrequent recruiters to trials. The job of discussing enrolment could often fall to younger, less senior staff, sometimes during the night when fewer senior staff would be present. Given the less senior position of those with responsibilities for discussing trials with parents, and the fact that local decisions about a NICU's agreement to collaborate are made by consultants, it is important to explore the types of decisions that different members of staff feel that they make.

How autonomous are the decisions that the neonatologists make about trial collaboration?

During the interviews, a question was put to most[34] of the interviewees which was meant to assess the voluntariness and autonomy of their collaboration. Typically they

[34] The question was omitted or incompletely answered in eight interviews. Where there were time pressures for interviewees some interview were necessarily shortened. In some instances the semi-

were asked: "Has the involvement that you have had in trials been optional, or has it been an obligatory part of your role?" Responses indicated that almost half of the interviewees felt that their involvement was optional, (7 consultants, 6 registrars). It was the case however that seven of those who stated that their involvement was optional then made additional qualifying statements to indicate that although they could stand outside of a trial if necessary, they did actually feel pressure or under some obligation to collaborate. Five of these were registrars. Essentially they argued that they were technically free to make a choice not to recruit, but that it may be difficult to do so in practice. When their responses were re-categorised, as shown in Table 4, this suggested that only six neonatologists (5 consultants and 1 registrar) felt that they were not under an obligation to collaborate.

Is involvement with trials optional or obligatory?						
Optional		Obligatory		Q. omitted		Total
Cons.	Registrar	Cons.	Registrar	Cons.	Registrar	
7	6	2	7	2	6	30
Made statement that they felt under pressure or obligated (recategorised responses)						
No		Yes		Q. omitted		
Cons.	Registrar	Cons.	Registrar	Cons.	Registrar	
5	1	4	12	2	6	30

Table 4 - Is involvement with trials optional or obligatory?

Although these are small figures, they suggested a potentially useful line of analysis. The data were therefore examined to look in detail at the nature of any obligation or pressure, and to consider different experiences according to career stage. The aim here was to gain greater understanding of the nature of collaboration for different types of neonatologists.

The feelings of obligation that were described varied. Some interviewees articulated an almost light-hearted acceptance of a general expectation that they would

structured nature of the interview meant that the discussion moved away from a particular line of questioning as other lines were followed.

collaborate with trials. A registrar commented: "it's taken as read that you would attempt to recruit, given the opportunity" (Int.18). This was especially the case for those appointed to a post with a specific research element. There was, however, a fine line between an obligatory and an optional situation, as indicated by two registrars whose comments are representative of many in the sample.

> Dr #24: I think it's as close to obligatory as it can get. I mean no-one has put the thumbscrews on and said "You must", but it has been assumed that all the specialist registrars would recruit for these trials.
>
> CS: If you came across a trial or situation where you weren't happy, would you feel able to opt out?
>
> Dr #24: Yes I would yeah, yes, no doubt if I thought it was unethical, I wouldn't and I would go and see whoever was responsible and explain why I felt it wasn't. I think that would be fair enough, yeah.

and:

> (laughs) You can't make a trial obligatory, so it could never be an obligatory part of your work. You have pressure applied to you by people running the trial and by the people running the unit where you are working, which means that you should recruit patients to the trial . ...[But] I think we *should* be recruiting children to trials because it gives us the information. It's never been an obligatory part of my work but whenever it's possible I'll do it if there's a trial going. (Int.9)

Some however felt a more significant sense of pressure which could be difficult, and this clearly related to their position within a NICU hierarchy. Several interviewees described being advised by a senior colleague that they would be expected to recruit to trials, or that a particular case fitted eligibility criteria and that they should offer trial enrolment. They often had to go to the trial folder to check details before going to speak to parents. For some there was clear discomfort. Here three registrars describe their early experiences of recruitment. The first two describe familiarising themselves with trial details, as they were given responsibility for recruitment.

> Dr #20: The first time it was horrible, because I didn't have any support and that was to do with the INNOVO Trial. ... My boss wasn't very approachable, fantastic bloke, but you couldn't talk to him. He just gave me a massive file, absolutely enormous and I had to get to know it and read it and work out the do's and don'ts and the inclusion/exclusion criteria. I only recruited two people in about six months and it was bloody hard work doing that

CS: Do you find the process any easier now?

Dr #20: Yeah, well I know a little bit more about research now, ... so I think I understand some of the problems, and also I'm not as afraid, perhaps, now to just ask questions.

and:

I think one of the most important things is that we need to be taught about how to recruit and how trials should be run and have some sort of training in it, which we just don't get. We get thrown in at the deep end and told, "Oh, we're doing this trial and you've got to recruit such and such," and you just [look] on the shelf and ...there's all these trials going on, all these folders on the shelf that you need to make yourself familiar with. That's what we're told. ... You've got to really sort of try and be on the ball and know ... what sort of trials [the unit is] involved in, so if an appropriate patient comes along you need to be able to know what to do. You tend to learn that as you go along rather than anybody sitting you down and saying we've got all these trials. I think patients get missed because not everybody knows about all the trials. I've certainly missed a couple of patients, not with INNOVO but with [the CANDA Trial] when we initially started we just didn't know that these trials were going on. (Int.21)

The third registrar described how trials can be especially difficult for less experienced staff.

The more you were involved in one particular trial I'm sure recruitment would become easier. One of the difficulties of the neonatal unit of course is we're passing through as part of our general training and, you know, these are studies that at the outset you're unfamiliar with and you have to learn very quickly and if the truth be known you don't get that much explanation at the outset. It's usually the typical scenario, in the middle of the night and it needs to be done. (Int.10)

The need for the less senior doctors to act in accordance with the collective decision to collaborate with a trial was also mentioned by consultants. The explanation of one consultant suggests that opting out of recruitment is technically possible, but he makes it clear that it could be quite difficult to do:

I suppose it's obligatory if the consultant were to say "The child needs randomising into a particular trial because ... it's suitable in terms of the eligibility criteria." It would often be left to one of the juniors to do that, and therefore you wouldn't particularly have a choice. I mean, if push came to shove and you said ... "I'm not happy getting consent from the parents," well, you wouldn't be forced to do it but it's just an unwritten rule that that's what happens. (Int.25)

A registrar described his own experience in almost the same terms:

Dr #1: This was my first house officer job straight after medical school. Basically the impression that you got was that your consultant was doing the research, you had to recruit the patients. That was that!

CS: If you'd wanted to opt out would you have been able to or would it have been...?

Dr #1: There was a lot of pressure not to.

The descriptions which were given by several of the consultants of their own experiences of recruiting to trials earlier in their careers were very similar to those described by the registrars, suggesting that this is a widespread, long-lived situation. Two consultants indicated that their freedom to make independent decisions about recruitment eventually came with seniority (emphasis added).

It's never been obligatory as a consultant, except from my own conscience, as it were. When I was a research fellow that was what I was supposed to do, ...it was obligatory at the point when I said "Yes, I'll do the job". (Int.2)

I suppose it was obligatory as a trainee ...[If a unit] decided to try the multi-centre trial then you were de facto part of it. ... [But] if I had strong feelings about either the ethics or the science of a trial and I didn't feel it was worth doing, certainly *since I've been a consultant* then I wouldn't have taken part in it. (Int.19)

These quotations are illuminating. They give a sense of the obligations to conform that younger staff can be under, which may be lifted at a later stage in their career. In part this relates to the relative lack of experience of younger clinicians with trials, evidence and possibly with the interventions under consideration. The issue is not however simply about their role in decision-making. There is also an issue of equipping those who are training to gain in experience and understanding of delicate clinical and ethical situations. Throughout the interviews there was a sense that the need for personal equipoise increased according to seniority. One consultant felt that different standards for personal equipoise were needed according to the contribution made to a trial. Crucially he saw a distinction between the standards required of the consultants and the non-consultants.

If [I was making] an intellectual contribution to a trial, then I couldn't be involved in that intellectually unless I was in individual equipoise. So if I was on the INNOVO Steering Committee, and I actually believed that nitric-oxide is the best thing since sliced bread, ... I couldn't put that to one side for the greater good. I just couldn't be involved in that, so individual equipoise is very important there. However, I think when you are more junior, if you are the SHO

> or the registrar or whoever is obtaining the consent, and you may not have all the papers to hand and all the evidence to hand, ... I don't think it matters what those individuals think, as long as they're capable of obtaining consent and understanding the issues on the spot. I'm not sure it matters what their individual view is. You know we might get a registrar that's worked in another place that says: "We used nitric-oxide and it's fantastic" and I wouldn't have a problem with their individual equipoise being perhaps not the same as the equipoise that's required for the INNOVO Trial. (Int.23).

These various accounts suggest that when the decision to collaborate with a trial is considered in collective terms, the roles of those involved can be very diverse, ranging from being a driving shaping force within a NICU to being an individual with far less opportunity to act independently. These accounts are however, very much shaped by a focus on the hierarchical and collegiate setting in which the individuals operate. When the focus is shifted to how the individuals view the actual trials, and how they deal with collaboration on a case-by-case basis, other dimensions are added to the mix.

Level 4 - The individual in practice

It is in considering the views of the individual in practice, in relation to actual trials, that personal decisions about collaboration are finally brought to the fore. Here the focus is on actual decisions made in relation to real patients who are eligible for specific trials. The neonatologists' views of each of the two trials are considered, in terms of their perceptions of the interventions being assessed, the implications of the consent process and enrolment for the families. These are discussed in relation to their effects on decisions about collaboration.

Views of the CANDA Trial

During the interview period for this study the CANDA Trial results were announced. The finding that there were substantial differences in the survival rates between the babies in the two arms of the trial was totally unexpected and were said to be "shocking to everybody" (Int.9 registrar). Some of the neonatologists felt that they had to square within their own moral framework the fact that some of the babies who had died within the trial having received ALEC, the artificial form of surfactant, would probably have survived had they received Curosurf. Unexpectedly the

CANDA Trial changed UK neonatal practice in a very important way. Around the country NICUs that had used ALEC shifted to using Curosurf and ALEC was withdrawn from use. When the neonatologists who were associated with the CANDA Trial were asked about their experiences and their views of the trial, for most this was in the light of their knowledge of the results, and to some extent their responses must have been affected by their own sense of comfort or discomfort with the findings.

The trial interventions

The CANDA Trial was viewed extremely positively by most of the neonatologists. It was considered to be well thought out scientifically and ethically, and there was often a certain satisfaction derived from having contributed to a successful trial.

> I am particularly proud to have been associated with CANDA, because I think it was a really well thought through, well-organised trial. ... There's a huge sense of professional satisfaction in having contributed to something really important like that. (Int.28 consultant)

A crucial factor in the design of the CANDA Trial was comparison of two similar, trusted, previously trialed interventions. Surfactant is a crucial tool in neonatal care and the two forms were familiar to all the clinicians involved, although not all had experience of working with both forms. A key issue related to the difference in the speed at which the two forms of surfactant worked; Curosurf, the natural porcine form worked faster than the artificial form, but this did not necessarily mean that this benefit, if indeed it was a benefit, persisted into the longer term. These issues were very well understood by the CANDA Trial interviewees and the neonatologists gave very clear descriptions of the issue of speed of action and efficacy. For instance:

> I knew that Curosurf worked faster having worked with it before and from my experience of working here with ALEC. I knew there was a difference from that point of view but what wasn't clear when we started the trial was whether [there were] any other differences. (Int.1 registrar)

The neonatologists frequently described the clear state of equipoise which existed for the CANDA Trial. In some trials equipoise exists partly because there are different schools of thought on a given treatment, with professional communities disagreeing on potential benefits and hazards. Here there seemed to be a strong sense of

unanimity based on the widespread expectation that the treatments were very similar, despite the differences in speed of action. Some of the ease that was expressed related to the fact that the trial was expected to contribute to medical knowledge by demonstrating little or no difference between the two surfactants. Any small differences may have had cost implications which could then guide treatment decisions. A registrar described his earlier expectations for the CANDA Trial.

> You've got two treatments that were established. You are hoping that either there's no difference, or the difference that might be there doesn't have an effect on anything substantial from a health point of view. It's going to be small if there is [an effect]. For any study you start from a position of zero, of a null hypothesis ... you think there's probably no difference, and you believe there's no difference, and therefore you're trying to prove that there's no difference, and therefore there's not a problem. (Int.6)

Widespread comfort with the CANDA Trial meant that offering the trial to parents was seen as ethically sound.

> We genuinely didn't think there was any difference, it was very easy to say [to parents]: "We don't think there's a difference." (Int.23 consultant)

This sense of ease with the trial did not only relate to the anticipated similarity between the interventions. ALEC and Curosurf were seen as safe, effective, proven treatments. It was clear that the neonatologists did not feel that there were particular risks that needed to be considered.

> Unlike other drugs... there is this balance of safety, benefit and harm, whereas with surfactant I'm not sure that anyone's actually come up with a valid down side to it. (Int.25 consultant)

These various factors combined to make the trial seem uncomplicated. Two registrars said it was " very easy on the conscience" (Int.24) and "it wasn't one that caused sleepless nights." (Int.24). Given the view that the choice of surfactant was unlikely to affect outcome for the babies in the trial, the parental decision about trial participation was often seen as relatively simple, as indicated by a registrar: "There was no discomfort about getting consent because you felt quite happy about giving surfactant of any sort" (Int.8). A form of surfactant would in fact be administered at delivery as a routine procedure, wherever there was a clinical indication, regardless of the parental decisions about the CANDA trial. This led to concerns for several

interviewees that the existence of the trial had the effect of involving parents in decisions which otherwise would have been made by clinicians.

> Both medicines were safe. ... There is no question of them being dangerous to the baby but it was a question of we didn't know which one was better. ... It wasn't a decision to give or not give treatment. We would have given [surfactant] ... because that's the accepted treatment .. And normally we wouldn't be consenting parents to give surfactant, we would just give whatever we had in the cupboard. It was only just because we were doing the trial that we actually ...[discussed it with] parents. (Int.1 registrar)

> I always felt that it was a very minimal decision [for parents] because [previously] ... the reason a baby got ALEC or Curosurf [related to] the way the ambulance drove. If it drove to [City X] it would have got Curosurf, if it came to [our unit] the baby got ALEC. You see that decision was totally out of the parents' [hands]. ... [before the trial] we never ever used to ask parents if the baby should get Curosurf or ALEC, they just got ALEC. I felt the reason they were entering the study ... was really saying we can collect the information on the [baby], because ... both were known to be effective, and no evidence suggested one was better than the other ... Obviously [for] a trial you need to get consent, but ... it was a minimal intervention I thought. (Int.6 registrar)

Although all of the interviewees felt that randomisation was acceptable for the CANDA Trial because of the uncertainty over any long-term effects of the surfactants, the known short-term differences did affect their views. Whilst there were no statements of a clear preference, the differential speed of action led to an inclination towards Curosurf for a minority. This inclination was however always coupled with a statement that this did not mean that they felt uncomfortable with the trial.

> There's a baby in front of me who could have Curosurf and be "better" in inverted commas, within a couple of hours or if it's ALEC they're better in 36 hours - but in fact you have to look further down the line and see that in two weeks or in two months they're both exactly the same ... one's no worse off than the other, and also look at the other side effects, the changes in blood pressure, etc with Curosurf, so I could rationalise it. (Int.18 registrar)

This registrar added another interesting comment.

> My own baby would have been eligible for the CANDA Trial - I knew that for me, for my baby standard treatment [in my local hospital] would have been ALEC. If I'd have entered the CANDA trial it would have been ALEC or Curosurf, and that was a win-win situation, because either got ALEC, which would be standard treatment anyway or got Curosurf which might have been slightly better. (Int.18)

Whilst clinical experience with the two surfactants could consolidate personal equipoise (first quotation below), there was some evidence that it had had the opposite effect for a registrar who expressed some unease but "rationalised" his position (second quotation).

> We've been involved with surfactant trials before CANDA, and interestingly I've been very negative about artificial surfactants until we used them and [then] I came away thinking, well actually, maybe these aren't so bad. ... During the trial I began to wonder, [although the natural surfactants] worked much more quickly, whether they were so good or not, so my preconception had completely ... turned over. So by the time we got to this trial, I felt well this is perfectly legit. I really don't know whether this is the best or that. So I felt happy about that. (Int.15 consultant)

> I came here from a unit where Curosurf had been used, and we use ALEC [here] and I saw quite a marked difference, ... I actually felt Curosurf was better and the CANDA trial was obviously trying to assess that. The surfactants work in different ways and, you know, I can rationalise that although you could see a more instantaneous improvement with Curosurf the final outcome may actually be just as good or better for one or the other. (Int.18)

In a rare statement a registrar expressed a clear preference which could shape a decision to approach parents. She was asked whether she had any treatment preferences. She agreed that she did but these were not expressed in terms of the expectation of an effect on outcome for a baby, but in terms of the effect on clinical management for which she would have been responsible.

> I've certainly [felt] that with the CANDA trial, hoping they were going to get Curosurf rather that ALEC, just knowing how babies respond to it ... From a purely selfish point of view it makes ventilation in the first few hours easier. (Int.7)

The impact of enrolment on parents

An important feature of the CANDA Trial recruitment process is that it occurred at the very start of a relationship between a neonatologist and a family. The parents who were asked to consider enrolment of their baby onto the trial were approached antenatally as the trial protocol indicated that surfactant should be administered to the

baby within minutes of birth[35]. At a point of discussing the trial, the extent to which a baby would be affected by its prematurity was still unclear. The parents were often in very difficult and worrisome circumstances. Women were either on a ward with high risk factors such as pre-eclampsia, bleeding or signs of early labour, facing the probability that their baby would be born early, or in the delivery suite at a stage when delivery was inevitable. The neonatologists discussed how they felt about approaching parents in these circumstances. The decisions that they made not to make an approach are dealt with in the following chapter.

When the likely or imminent delivery of a trial-eligible baby was identified, the neonatologist with responsibility for recruitment at that time, would choose whether or not to offer the parents enrolment. The discussions involved could be daunting, with one registrar commenting that he was "hesitant about the difficulties [of] consenting mums at 3 o'clock in the morning when they were about to deliver". He rationalised the situation with the argument that "the treatment they are going to be getting is the treatment they would get anyway ... therefore you are not putting upon them something which is very unusual". (Int.6)

The factors that drove the decision to approach parents were infrequently discussed in direct terms in the interviews. Initial decisions to approach appeared to be most simply made in terms of whether or not the baby would fit the eligibility criteria, with a subsequent judgement, made on visiting the parents and assessing their circumstances, as to whether a discussion about the trial would be inappropriate. Discussions which were considered inappropriate, because it would not be possible for the women to give a decent standard of consent, and the associated decision not to mention the trial were described in detail. A consultant described the type of judgement that could be made on arrival in the delivery room.

> It depends what sort of condition the woman is in. ... I wouldn't approach her unless there was a reasonable time period before she was likely to deliver. So [if] she was having contractions every three minutes and in a lot of pain and discomfort and being given analgesia, then it's not appropriate to approach her then. (Int.27)

[35] Surfactant is usually administered quickly but the point here is that the trial protocol required it to be consistently given within a strict timeframe in the trial centres.

Dealing with women who were anxious and in pain was clearly a big issue for some interviewees, but it also seemed that for those who did feel comfortable, they were very much at ease. Where they felt they could mention the trial, it appeared to be almost a routine issue. A registrar commented:

> Most of the time if I'm presented with a baby I don't kind of sit down and try and make decisions between whether I should be trying to enrol this baby into a study or not. (Int.13)

Part of what made the decision to approach parents easier was the sense that they were being asked to consider something of relatively little consequence.

> People are stressed by different things, people take in different amounts of information at different times, but I think with CANDA, to be honest, the decision was a very minimal decision. (Int.27 consultant)

Whilst the neonatologists often argued that they felt that CANDA Trial did not involve a big decision, some argued that this view may not be shared by parents. A registrar indicated that although he felt that it was a stressful time to take on board information and to consider trial enrolment, his concerns about raising the subject of the trial lay with the impact of the discussion itself on the parents, rather than in terms of the effect of the trial interventions on outcome.

> To ask them to consent to treatment in their small baby who's yet to be born, I think that's a really big thing. And unfortunately because of all the stress and pressure they're under ... they kind of recognise that it is a big question that they're not able to give the amount of time and thought to they would like to. So I think it is really quite a lot to ask of them at that stage. (Int.13)

A registrar quoted earlier who argued that the parents were being asked to consider a quite simple trial with only a "minimal intervention", argued that the need for consent, which would not be sought for the use of surfactant outside of a trial, complicated already difficult parental experiences. He commented: "I felt in a sense we were causing more anxiety than the intervention almost justified." (Int.6)

There were instances where approaching parents could cause neonatologists discomfort and anxiety. A registrar with no previous experience of recruitment to a trial described how difficult she found approaching a labouring woman for the CANDA trial, something which she felt she had little choice about.

Dr #7: [It was] stressful because I'd never recruited a child to a trial before. Stressful because mum was in labour and was having contractions every few minutes and in a lot of pain and I felt I was intruding. I didn't feel it was an easy situation to be getting consent.

CS: Do you think she felt that?

Dr #7: Yes, I do and also for dad as well, because he was present. I think it was their first baby. And also it was stressful because I think they'd already been approached by obstetricians for an obstetric trial that was going on, so it was the second consent that they'd been asked for, for a trial in a short period of time.

CS: So were you more or less obliged to ask those parents? Did somebody ask you to go and ask them or was it something you were aware of and initiated yourself?

Dr #7: Well, no, it was because we'd been approached by [a consultant] earlier, I think it was only about a week before, about the CANDA Study and emphasised that we were to try and recruit as many babies as possible if they were eligible. And this just happened to be someone who was eligible whilst I was on call.

Views of the INNOVO Trial

The intervention

The neonatologists were very familiar with the idea that INO, like surfactant, was known to have a short-term effect, but whether or not this translated into a long-term benefit was unclear. They did however vary in how they described the possible effects of INO and how they saw the INNOVO Trial.

A limitation of this research is that in addressing the views of those working in NICUs which lent support to the INNOVO Trial it was not possible to access the views of those in NICUs where collaboration with the trial was judged to be unacceptable. Comments made by interviewees did, however, suggest that very disparate views exist. A consultant referred to colleagues in non-collaborating centres who think that "nitric oxide is perfectly wonderful" (Int.11) and did not feel that another trial involving INO was warranted. They were not be prepared to randomise patients to the control arm of the trial. Mention was also made of those who were uncomfortable with INO and would not wish to expose their patients to the gas. Even within the trial centres there was some suggestion that some negative views of INO existed, with a

registrar commenting "Even amongst our own consultants some just don't like it, just anecdotally they don't like it and won't use it."(Int.26), but no such views were directly reported in the interviews.

The neonatologists who were interviewed varied in how they viewed INO, but the differences between their views were often quite subtle. The main issues addressed by the INNOVO Trial were efficacy and safety. Mindful of these issues, some presented INO as an intervention which should be treated with caution.

> This is an extremely powerful substance. It is a little bit like some of the short acting hormones in the body, like adrenaline. It has effects all over the body but we think if you give it by inhalation it's mostly acting on the lungs. We have no idea if there might be some terrible long-term effect of nitric oxide that we can't even imagine, but faced with the situation now, there's a possibility that the baby may benefit if we use it. (Int.28 consultant)

The possibility that INO might not be treated with caution, given the potential risks involved, was worrisome for a consultant.

> I think that one of the problems with new treatments, like nitric oxide, like high frequency ventilation, there's a lot of young doctors coming through the system who like all these brand new treatments and are very keen to use them willy-nilly and they're unproven. I think that we should be very careful about what we do. I think the risks of nitric oxide in terms of haemoglobinaemia, platelet dysfunction, bleeding, long-term neurological outcomes or, you know, whatever the side effects of the nitrous dioxide - or whatever's produced - one doesn't know. I think it's very important that we try and conduct a proper trial to look at it so that's why I would support it. (Int.16)

The views of another consultant were made clear when he explained how he would describe the balance of potential benefits and risks to parents:

> We know there are short-term effects of nitric-oxide, whether there's a long-term effect, we have absolutely no idea. However, if your child gets nitric-oxide, I can tell you that there will be a short-term effect. I don't know anything about long-term effects, that's why we're doing this trial, but equally there are potential side effects which – we're not convinced they're enormous but they may be enough to prevent it being used, particularly if [it has] no long-term effect. So it's a balance between something that's going to help, possibly in the short-term, may help in the long-term, but may have a side effect that we're not sure about. (Int.23)

In other accounts a greater emphasis was placed upon uncertainty over whether the short-term benefits persist over time. With the focus shifted from risk, the question

about INO related more simply to whether it is effective or ineffective. A registrar who defined the INNOVO Trial as "a fairly benign trial" felt that when parents are asked to consider enrolment for their baby, it would not be "a particularly big decision" (Int.9)

> If we were using something that was potentially toxic, you know, some new drug that has potentially disastrous side effects then you might be asking them for a more important decision because you're asking them to increase their child's level of risk of an unwanted side effect. Whereas in INNOVO I think the only thing you're asking them is asking them to increase their risk of being exposed to nitric oxide that has a small chance of helping them. (Int.9)

A step further along the continuum of views of INO was to feel assured that there was no potential for risk to babies as a result of exposure to INO, an assurance which could be passed on to parents. Two registrars explained how they presented INO.

> You can still explain to them that ... the reason why we are doing the trial [is] because nobody knows a hundred per cent the effects of this medicine and it may affect the baby or it may not affect the baby, but it's not going to harm the baby. ... You have to explain to them that you're doing this as a trial because ... this medicine hasn't been proved to be effective by scientific evidence. (Int.3)

> I think the parents need to know that's it's not going to have an untoward effect, the way I always explain nitric [is] that it might help but it may not help, but it's not going to make things worse, which is probably right. (Int.21)

The use of INO - equipoise and therapeutic intent

When the decisions that were made for individual babies who were eligible for the INNOVO Trial were examined, it became clear that the line between equipoise and therapeutic intent could be fine and fluctuating. Although the term "equipoise" was not always familiar, the interviewees were clear about the principle of uncertainty as the ethical basis of RCTs and its relationship to decisions about collaboration and enrolment of individual babies.

In considering the enrolment of individual babies, the relationship between equipoise and therapeutic intent was not so straightforward. Where those at the centre of the research situation are extremely sick and vulnerable, as was the case in this trial, and where those in a position to initiate trial enrolment are already concerned for their condition, decisions in practice could be initiated by clinical issues rather than by

principle-based, research-led factors. An explicitly therapeutic element in the decisions to offer trial enrolment was frequently articulated and explained at length with many striking examples, one of which is presented in detail in Box 3, conveying something of the more extreme circumstances in which decisions about trial collaboration are made.

Analysis indicated that the neonatologists expressed therapeutic intent in one of three ways, with INO being seen as:

- a potentially useful tool to be used with caution
- a highly desirable intervention
- a rescue therapy

These three responses to INO broadly related to the condition of the baby in question, With increasing severity the possible value of INO could increase and the relevance and balance of equipoise for individual cases could shift.

INO as a potentially useful tool

Where INO was seen as a possibly useful tool, this was often, although not always, in the more calm, less advanced cases. If recruitment was considered for babies for whom a range of treatment modalities were available, this was presented as a simple professional decision. A consultant drew a comparison between the two trials considered here and his previous experience with paediatric leukaemia trials. In the leukaemia trials: "the whole care is based on the randomisation, whereas what we are doing [here] is taking one element of care, and randomising it." He extended this example to include the ECMO Trial.

> For ECMO of course this was the end of the road really, and you either would offer ECMO, which was a new thing and might keep the baby alive, or you carry on where you were, so there was a really big change there. This is not so, I don't think. This is [just] a part of the treatment (Int.15)[36]

[36] It should be noted that this observation was made by just the one neonatologist but is potentially significant as it places a decision about research firmly within the broader context of care.

Even in more difficult cases however, some maintained a position of equipoise, which was clearly a guiding principle in their practice. One such example was provided by a consultant who made it clear that he did not develop treatment preferences and was therefore comfortable with allocation to either arm of the trial. Whilst it was common for neonatologists to acknowledge some difficulties with allocation to the control arm for the babies who were particularly sick, here it was stated that allocation to the control arm "doesn't bother me in the slightest:"

> I believe I stand in equipoise and it's an important question to answer. If you believe that then you shouldn't mind which they get. Okay I'd like to see nitric oxide to be proven to be safe and effective because it's a research interest of mine and it's something that would be another treatment to offer these babies. But you know, it doesn't bother me that they get the control arm because I don't think that we know and unlike other drugs, like surfactant, for example, there are potential toxicities, very real toxicities associated with it, so there is this balance of benefit and harm. (Int.25)

INO as a highly desirable intervention

Where INO was seen as a highly desirable element of care, this was often when the neonatologists felt that they had nowhere else to turn. In such circumstances they could be very cautious in their presentation of the trial to parents. A consultant referred to times when there can be "a feeling this might do them some good" but in presenting the trial it "is something you can usually mask" (Int.19). This awareness of a need to avoid disappointing parents was very commonly discussed, but at the same time the neonatologists could very much wish to access INO. Using a striking phrase (italicised) which occurred several times in the ECMO parents' accounts of their conversations with neonatologists, a registrar said that his decisions about the INNOVO Trial were very context specific, a clear clinical judgement rather than an indication of equipoise.

> If I think that *my back's up against the wall* and I want to go and potentially use a new treatment which I think could potentially be beneficial to the baby but is available as part of a trial, then I'd be quite happy to go and sit down with the parent and get it over and done with so that I can go ahead and I've got another treatment option there. So [my decision] depends on what I perceive as being the benefits of that trial to that patient at the time (Int.8)

Where the issue of the INNOVO Trial arose for the smallest babies for whom there were few alternatives, this could increase the relative value of INO, as explained by a registrar.

> [For the] INNOVO trial, this thing is there at the back of my head when I'm talking to the parents. ... You've got a very sick baby who's needing a lot of respiratory support, it's a small baby who is not likely to have other modalities or treatments. ... So the option for [a big] baby is to try with other vasodilators. The safest and easiest vasodilator for us on the unit is obviously nitric, [but] if it is a small baby the other option doesn't exist. So you think in your mind, okay, this baby is going to benefit from nitric, and you know it. Then you randomise and this baby is in the control arm, so that is a bit disheartening, yes, true. ...You have this fear at the back of your [mind]. You just want the best for the baby and this baby comes to control arm, the baby doesn't get nitric. (Int.17)

INO as a rescue therapy

In the most severe cases it seemed that it was simply impossible for the neonatologists not to feel drawn into the hope that the baby would be allocated to INO. A registrar who was elsewhere very clear about his support for trials and his own state of equipoise with regard to the INNOVO Trial, described how certain circumstances can make the experimental intervention seem highly desirable and can lead to preferences.

> I think sometimes you get a sort of a bit of a sense of euphoria if you're going to try something that you think might make a difference in a dying baby. So I've actually generally, I'll be honest with you, been disappointed when babies haven't drawn nitric oxide and quite euphoric when they have. (Int.26)

Where local practice in a neonatal unit was to try all other options before considering randomisation, this could lead to INO being considered mainly as a rescue therapy. A registrar described circumstances which are likely to foster this situation.

> The kids that we seemed to be recruiting are the ones that we're at the end of the line with almost, and maybe that's the wrong thing to be doing but that's how it feels at that moment. You try everything else, you try all sorts, you do this, do that and then when you're desperate you think recruitment for the nitric trial. And that's how it felt that everybody on the unit was doing like that. And I think that's why you've ended up with all the real sickies [in the trial] that die at the end of it, ... just because whatever they have is that bad that it doesn't matter what you do, they're not going to [survive]. (Int.21)

When asked if the parents might be aware that their doctor feels that randomisation is a last attempt at finding a solution for their baby the registrar agreed.

> I've said to them that we're starting to run out of options and we've got to a stage where ventilation's difficult and there is something that we can try. It may or may not help. But yeah, I think parents are, because they can see you struggling away there and you're making all these phone calls, so yeah, they do realise. (Int.21)

As suggested here, the babies recruited to the INNOVO Trial were in fact at the more severe end of the illness spectrum than had been anticipated by the trial team. A consultant gave an indication of how this can happen. Interestingly, given the focus on the desirability of INO in extreme circumstances, he discussed how concern over INO could in fact cause delays in considering the trial, impacting upon the conditions in which the actual decisions were finally made, and caused INO to be viewed as a rescue therapy. He felt that the slow rate of recruitment to the INNOVO Trial related to "personal prejudices" and "worry about theoretical concerns about nitric oxide that we have yet to actually prove. In his unit he felt that there was "reluctance to use this experimental gas". He said "I'm frustrated by it. I don't know why it's so different." and went on to describe the consequences for babies and parents.

> I think we leave it until children are very much sicker than we would do so for other trials before recruitment to INNOVO is considered. ... We often wait till the point where the child is really very much moribund but the circumstances then in which you approach the parent are then such that they are very anxious and distressed and terrified about what will happen to their baby. (Int.2)

In the most extreme cases, some of the neonatologists indicated that the chance of the baby being allocated to the control arm might not be taken, or the allocation might be overridden and INO administered, an issue which is described in further detail in the following chapter.

In quite a complicated statement a registrar summed up how neonatologists' reaction to the trial situation can depend on their state of equipoise, which can change over time and according to their perception of a baby's needs. His description contains much of the variety which is present in the views identified in this study – the shifting nature of equipoise, the independence of each decisions for each baby, and the responsibilities that are owed, sometimes in competition, sometimes congruently, to children and their families and to a trial.

If at the beginning of the trial you are heavily in favour of it you are quite keen to recruit. Later on you get quite suspect about long-term side effects, then you may be less inclined to get that baby in. But you may be more concerned about the outcome of the trial long-term, you need to know the answer. ... There's a whole, individual baby, your patient, versus the outcome of the trial. If you think there's a definite advantage to the drug then you want the baby to get that drug. But then you're less concerned about the trial. .... If you think ... the other way round, ... you want to know the answer and you're doing it for the trial's purposes rather than for the baby's purposes, you're not too bothered if the baby gets enrolled or not because you're not that convinced about its effect but you think maybe it is worth getting the baby on board because for the trial it would be nice to know so that they can stop throwing [nitric oxide] at the babies. (Int.8)

Dr #20 described the case of a baby admitted to his neonatal unit while he retrieved a sick baby from another hospital. In his absence, a senior colleague was relieved by a junior doctor at 1am.

"I found a very inexperienced SHO at the baby and the registrar was doing something else. ...I walked up and I looked at the settings on the monitors and the ventilator and we started the baby on 100 per cent oxygen, but he wasn't being ventilated adequately. It was on low ventilator settings, the sort of stuff I start a baby off on. I thought, 'This doesn't make sense', plus they'd said he was two or three hours old by then., ... I quickly [increased the] ventilation and it made no response. I tried oscillation and ventilation, did all the different types of ventilation that I know, different modes to see if it actually responded. No response. We were really fighting against it and were under monster high pressure and really getting nowhere. [I] discussed it with the consultant at home. I'd spent ... probably three hours trying hard to get some life into this baby really, I mean all his vital signs were okay, but it just was needing absolute maximum effort to get any oxygen into the baby. So it seemed to me naturally that the baby was having fetal lung problems and shunting, so we had to open up a vascular bed and nitric oxide was thought to be the best thing for him. So I asked my boss. We talked it through and he said, 'Let's try nitric oxide, randomise it', and that's when I got involved in... the INNOVO Trial.

I had a lot of problems with the dad. .... Mum had gone into labour, he'd been out on the beer with his mates.... He was pretty inebriated. He was quite abusive. The first thing he said to me when I came in [was] ... "No fucking chance on this unit', and walked off. So ... we had all this and I was trying very hard to involve Dad, because Mum wasn't there. She'd had a section and basically I could see the writing on the wall for this baby, that I was really fighting and nothing was working. He was quite aggressive and abusive in his language, although he did listen to me. ... I wanted to make sure he was involved because it seemed to be the right thing. And then, when we did come to randomise the child, it was very difficult because the baby by then was starting to decompensate in his chest, in other words he was starting to get bad gases and really and truly we should have really said, 'Right that's enough', perhaps. Perhaps someone more experienced might have done that at that stage, you know, enough's enough. But because I'd already, fifteen minutes earlier discussed it with my boss on the phone in some way to make sure we were doing it all correct, and we'd made the decision to randomise, I went ahead.

Mum was by this time wheeled upstairs. ... She was a very young mum. It was her second child actually. I mean she looked about fifteen. I think she was about seventeen, and he was a bit older, the dad. But anyway she just looked in shock. She was just frightened, pale and I had to say, 'You know, your baby's really - I'm worried that it won't make the night through.' This was 5 o'clock in the morning. ... We had to talk about the possibility of what other treatment, whether it's better to continue the same thing. ... She [was] 100 per cent for the trial. I explained what the trial was. It involved a gas and .. it can work or it can't. That's the setting I put to them. ... If you get the gas then it may work better than the other treatment, but it may not. But I said that I was sufficiently worried that I didn't think the baby wasn't going to make it through, it might be just worth trying something different, just for the sake of it. ... So it was quite difficult, because I had a dad who was getting angry and sobering up slowly, and a mum who was just not with us really with the shock. ... She was well enough to be wheeled up and come and sit by the baby and hold its hand, so she knew what was going on but she had a big problem when I said, 'The baby's dying', and you know, fair enough. I don't know what I'd be like in that situation. So I was hoping his dad might be taking it in a bit because I wasn't sure she was fully taking it all in, but I was hoping he was sober enough to be able to do that really. ...So I went away to randomise the baby. [The baby] got nitric on the randomisation, and by the time we were coming back it was now starting to look a bit pale and shut down and so we put [the baby]over to the nitric base, so that means we had to bag and mask him ... three feet to the next bay and plugged him into nitric oxide and got that going, but by the time we'd plugged him in he'd started to have some brachycardias which you know, I thought, 'Here we go'. This is the beginning of the end.

The nitric oxide got going for half an hour probably, before I said, 'Look the baby's about to pass away', As I had seen the brachycardias half an hour earlier, I mentioned christening. They wanted that, and [the father's] parents were coming in. In fact I tried very hard to keep the baby alive. I turned the monitors off literally as the vicar arrived.

Box 3: Account of professional decision-making for the INNOVO Trial in difficult circumstances (Int.20 registrar)

Discussion[37]

The division of the data into different levels of thinking about trial collaboration illuminates the links and the differences between the more abstract values that were held by the neonatologists, and they ways in which they related to trials in their everyday encounters with patients and their families. The organisation of the data in this way gives an indication of reactions to actual trials and how their defining features and the context in which they are conducted can shape professional views and actions.

Some of the interviewees, often senior consultants, were very consistent in their accounts of their principles and their practice. To use the words of one consultant they were in equipoise and so were "ethically at peace" (Int.23). The values that they espoused in principle largely held true for the actual trials. This group of consultants were those with the most influence in local terms and it was their response to actual trials that would establish the conditions of what shall be termed in this thesis "local equipoise".

For many interviews there were very obvious ways in which their responses to the very disparate conditions of the two trials in question differed. The two trials were presented by the neonatologists in very different terms.

The CANDA Trial was largely viewed in similar terms to the abstract and undefined trials that were considered in principle. It was almost a case-study in equipoise; the comparison of the two forms of surfactant raised so few difficulties that the trial was to some extent a non issue. There was no sense of discomfort over the interventions, but there was unease over asking parents to consider research at an inopportune time.

Presentation of the INNOVO Trial was by comparison far more complicated. Experiences of this trial were very much grounded in intense periods of clinical activity. As the question of recruitment often arose in the context of a struggle to save

[37] For the empirical chapters in this thesis, there will be a short discussion which pulls together the main points. These will then be considered in the main discussion in Chapter 10.

a baby, it was very different from the CANDA Trial which arose when the neonatologists had not yet engaged in any struggle on behalf of a baby. The INNOVO Trial decisions to approach parents were often clinical judgements relating to individual babies, as opposed to the research-led decisions made for the CANDA Trial. Although there was great interest in establishing the risks and benefits of INO and its role within the care of compromised babies, the INNOVO Trial appeared to be sometimes used as a clinical tool. Where there were local constraints placed on using INO outside of the trial, or where the norm was that the neonatologists should recruit to the trial, random allocation would became a means of accessing the gas. The fact that it was often stated that this decision could be left until a late stage in the progression of a baby's illness meant that INO took on the status of rescue therapy rather than a trial intervention.

For the INNOVO Trial, therapeutic intention could jostle for place with the principles of collaboration and risk management. Interestingly there was no sense of a conflict of values or of any inconsistency when the neonatologists expressed a therapeutic intent. In many of the difficult clinical cases, the utilisation of the INNOVO Trial was seen as a responsible thing to do, an action which arose directly from the care process.

It may be the case that this arises in part from the hierarchical and collegiate approach to recruitment that has been identified here. In circumstances where neonatologists might wish to turn to every treatment modality at their disposal, they can be aware that in order to utilise a particular approach they are expected to act in accordance with the local rules about recruitment. Whilst this process would appear to leave the less senior individuals with little room for manoeuvre, the accounts of the less senior neonatologists suggest that they do not experience this as a particular limitation. They state quite clearly that they have little choice as to whether to recruit or not, a finding which was replicated in each of the study centres and confirmed in the accounts of the consultants, but they also represent their decisions as grounded in valid and responsible consideration of the effects for their patients. This may be because they are generally supportive of the aims of trials and are therefore required to engage in an activity which, although difficult at times, is something that they may well chose to do anyway. This then makes the limitations within their role less obvious and their autonomy seem greater. It is very likely that if they had not been asked specific

questions about freedom, and how decisions were made in their department, this research would have suggested a simpler model of many individuals moving in towards the same goals without reference to the professional structures and obligations which affect and direct that movement.

Chapter 6 – The decisions that doctors make about suspension of trial collaboration

All of the neonatologists interviewed for this study had been active collaborators with the CANDA and/or INNOVO trial, lending their support through recruitment and in some cases through managerial roles. The role of collaborator can, for any trial, be suspended on either a permanent or a temporary basis. There were no instances where an interviewee indicated that they had decided to end their collaboration with a trial, a decision which would suggest dissatisfaction with the research itself, but there were many instance where judgements were made about suspension of collaboration in relation to types of parents, groups of patients or individual cases as they arose. These decisions, like those described in the previous chapter, could be made at the collective as well as the individual level. Suspension of collaboration as identified in this sample related to three main types of decisions:

- Personal ethical judgements
- Evidence-based judgements
- Clinical judgements

Although these headings suggest that these judgements are clearly differentiated into those which are ethical considerations and those that are not, clearly all decisions about whether or not a baby should be included in a trial involve some form of ethical judgement. Similarly ethical judgements are often clinical judgements. The headings are a means to separate out highly interrelated strands within the data in order to understand their role in the decisions that were made.

Part I - Personal ethical judgements

The neonatologists were all asked whether there were any situations where they would not offer enrolment in a trial to parents of a baby they know to be trial-eligible. A deliberately general approach was taken to access views on the principles that the interviewees held about recruitment to trials for the population of babies and parents they encounter. Occasionally their responses were directly or indirectly framed with

reference to specific issues raised for the CANDA and INNOVO trials, such as consent during labour or at a point of critical illness, but the neonatologists also drew on other areas of their experience, such as trials relating to pain control, feeding methods, drugs trials, and areas outside neonatal care.

Five interviewees argued that there are no circumstances where they would elect not to approach parents. They were clear that they felt that it is important to attempt to overcome potential obstacles and to make an approach in all cases. The majority of the remaining neonatologists did indicate some circumstances where they would decide against discussing a trial, that is they would temporarily suspend their role as a trial collaborator. Some were comfortable with this. Two interviewees stated that there were times where they had been busy and had chosen not to try to recruit eligible patients and one commented that there could be a general "degree of inertia" over some of the particularly challenging situations (Int.9 registrar). Most, however, felt that although they aim to discuss trial enrolment with parents wherever possible, there are circumstances where they consider it to be too difficult or inappropriate to do so. It was striking how specific and variable was the list of circumstances in which neonatologists would not approach parents to discuss a trial, as shown in Table 5.

Circumstances in which neonatologists would not approach parents to discuss a trial	**N**
Parents would not understand (pain, drugs, advanced labour, info difficult)	6
Parental stress (previous loss, particularly difficult circumstances, not coping)	4
Parental language problems	3
Neonatologist would not have enough time to explain	2
Parents would not have enough time to think	1
Consent is only possible by telephone	1
Social problems (eg baby would go on to be on 'at risk' register)	1
"Difficult" parents (angry and aggressive)	1
Poor rapport	1
Legal issues or complaints (poor existing relationship)	2
Educated parents wanting lots of information who would worry	1
Unmarried fathers where the mother is unavailable (can't legally consent)	1
Moribund baby[38]	1
Improving baby[39]	1

Table 5 - Circumstances in which neonatologists would not approach parents of trial-eligible babies to discuss a trial

[38] Although it would seem that the choice not to approach the parents of a moribund baby are clinical decisions, they are included here as they are also examples of an ethical line being drawn. These examples were given not in relation to the trial criteria but to parental circumstances.
[39] As for footnote 39 above.

Within the accounts of some of the difficulties associated with these factors, there are some clues as to how approaches to care and research underpin decisions about suspension of collaboration.

One of the registrars linked to the CANDA Trial gave a list of the types of situations in which he might choose not to approach parents. He described his decisions as being made on a "case by case basis". The examples that he went on to give were; women who had already "lost two or three babies", women who were incapable of understanding the information because of the impact of drugs, "very very young mums" and women who were far on in labour. These examples were all linked by the sense that it would be unfair to request consideration of a trial either because of an emotional situation or because the goals of informed consent are unlikely to be achieved. He described the need for awareness of the potential impact of such a request.

> If you are in equipoise then you presume that there's going to be no direct benefit one way or another to the baby, because whichever they get, as far as you're aware, they'll be getting the best treatment that you know about. Any difference that might be shown will be of use to future babies, so I think every time that you speak to a parent you have to be aware of that, and the decision as to whether or not you go ahead with that [relates to] whether you feel the outcome that might be found is an important outcome. ... Before you even start to speak to the parent you have to have got that clear in your mind. ... I had a few [cases] where it was very very clear that the mums were already so concerned, naturally, about what was happening to their baby, that to add an extra dimension seemed inappropriate, and I wouldn't do it, you know, I didn't do it. (Int.6)

A similar point (italicised) about the need to carefully balance the potential benefit to society against the potential for harm to the individual, was made by a consultant, also involved with the CANDA Trial. He thought that it might be inadvisable to approach parents with whom "your relationship isn't great", such as:

> ... a parent who would rather just have thrown a chair through the window because he's upset about something already. ... It's mainly because you don't want to stress these people any more *with something that isn't necessarily necessary for their child*, so if they've got difficulties with communication or other complaints or other problems, then it's probable that we wouldn't involve them. (Int.23)

The choice not to approach some parents for both of these neonatologists was directly linked to the prerequisite of collaboration, that they would be in a state of personal equipoise and so would not prefer one treatment or another. They conceived of a trial in terms of its potential value for medical science, and not with the expectation (at randomisation) that it would change the outcome for their patients. They drew on a research model, in contrast to those whose views are grounded in a primarily therapeutic model of a trial where participation if allocated to the experimental arm, is potentially of value in itself.

In some accounts it was evident that if it was felt that there were possible therapeutic advantages to be gained, this could make it worth approaching parents even in dire circumstances. Three registrars linked to the INNOVO Trial, the first two of whom stated that there were no circumstances in which they would not approach parents, presented a position which was primarily bound up with the needs of the patient, and their own need for an additional clinical tool, rather than with the needs of research. Even where the circumstances are difficult for consent, the focus here was not the trial or the parents but the baby (emphasis added).

> I treat the child, I don't treat the parents, and I try and remind myself of that. ... You've got to treat the whole family in a sense, but primarily I'm a paediatrician and I've got to try and think about the child and *what's in their best interests* and then put that opinion to the parents. (Int.20)

> If you felt that *it was going to make a difference* or you were at the end of the line with what you were doing, [it wouldn't] matter who [the parents] were or what they knew. (Int.20)

> Language difficulties may complicate the issue, but ... if there's a sick baby and I feel strongly enough that I want that baby involved in that trial, ...regardless of stress or language I would circumvent that and deal with it and just get their consent *if I think it's needed at the time*. (Int.8)

Part II - Evidence-based considerations

For the CANDA Trial there was little expectation that the research would show much difference between the two forms of surfactant. The evidence for the use of surfactant is compelling and NICUs around the country tended to adopt a policy of using one

form of surfactant or another. They could therefore be classed as 'an ALEC unit' or 'a Curosurf unit'. Equipoise was strong and largely undisturbed in the NICUs involved in the trial to the point where a registrar commented: "I would have said that during the running of CANDA I was desperately unexcited whether they got the natural or artificial surfactant" (Int.9).

ALEC and Curosurf had not previously been compared head-to-head. There was therefore no objective comparative data from earlier trials to inform the clinical situation, but unease in relation to the trial, created by clinical experience of the fast acting short-term effects of Curosurf, may well have affected the decisions that non-trial NICUs made to stand outside of the trial. Some indication of this was given by a consultant:

> Dr #23 We didn't get any people that were using Curosurf that wanted to take part in the trial.
>
> CS: You didn't? Oh that's interesting. Can you speculate why?
>
> Dr #23: Because they weren't in equipoise. They saw their babies get Curosurf and saw them get better quicker because Curosurf is fast-acting, ALEC isn't. So they saw their babies get better quickly and they said "Well if it's isn't broken, why fix it. We know that it works as well as other artificial surfactants and we think it works better actually because we've got our clinical experience that makes us believe this."[40]

The situation was very different for the INNOVO Trial. Concerns about potential toxicity were thought by the trial team and the funders to be sufficiently important to outweigh the fast-acting short-term effects of INO, and a specific research aim was to assess long-term benefits and risks for term and preterm babies. There are however important ways in which INO can be seen as a desirable treatment, as indicated in the

---

[40] A senior consultant involved in the CANDA Trial explained how there are several issues to consider in the use of a faster or a slower acting surfactant. No other interviewees explored this territory, but his description is useful as it gives an indication of the nature of the clinical decisions which are made at a unit level, and of the complexity of incorporating data into judgements about research and practice.

> [There were two major] reasons that we opted for ALEC many years ago, First, there was no data to say that it was any better or any worse than the other and it was considerably cheaper, and that's a perfectly reasonable option and the second thing is, a number of babies that we were treating were being transferred in, having been treated [in neonatal units up to] three hours away by ambulance. And to have a very fast-acting surfactant where you need to make rapid adjustments on the ventilator in the first hour or two after [administration] was not necessarily a good idea. Giving a slower acting [surfactant] ...could be... an advantage. You'd be [under] less ... pressure [with the] limited time ... you're less likely to have a pneumothorax en route. (Int.19)

INNOVO Trial protocol, which contains an explanation of an important aspect of INO and draws a comparison with alternative vasodilators.

> A big advantage of INO is that, because of its very short half-life, it only has a local pulmonary effect when given as an inhaled gas. Thus it can reduce pulmonary pressure without causing the systemic hypotension that often results from use of traditional pulmonary vasodilators such as tolazoline and prostacyclin. (INNOVO Trial Protocol 1999)

Even at the early stages of the trial, the advantages of INO for term babies were being presented in UK journals.

> Inhaled nitric oxide is, at present, the only effective, selective, pulmonary vasodilator which has been established by prospective, randomised trials to reduce the need for ECMO in the near term infant with hypoxic respiratory failure. The lack of effect on systemic haemodynamics, coupled with the relative safety of administration, when appropriately monitored, would support the use of INO in preference to other systemically administered vasodilators, including prostacyclin and tolazoline. (Finer, 1997)

Growing evidence of a useful long-term role for term babies emerged in the course of the trial, with the publication of follow-up data for the Neonatal Inhaled Nitric Oxide Study Group trial (NINOS 2000) showing a reduction in the short-term composite outcome of death or need for ECMO and no significant difference in the outcome at 18 to 24 months. There were, however, a number of trends in the data which showed a better outcome for the control group. The eligibility criteria for the INNOVO Trial did not change but the balance of the babies recruited to the trial shifted towards preterm babies and recruitment slowed, possibly as emergent evidence was incorporated into practice.

Neonatologists from all four of the INNOVO NICUs represented in this study, and at different career stages, referred to the increasing evidence of the benefits of INO for term babies, and described their discomfort about the possibility of their allocation to the control arm of the trial. In three of the units there was reluctance to recruit term babies at all, although there was no specific policy[41]. Decisions were made as each case arose, with a tendency to treat outside of the trial (see below). In one NICU a

[41] In sharp contrast, all the collaborating neonatologists in one country had a policy of ONLY entering babies into the term stratum; they did not recruit into the preterm stratum at all.

policy had been agreed just prior to the start of the interviews as described by a consultant.

> Dr #25: We are going to exclude [term] babies from being part of the trial because we've reached a consensus between the consultants that those babies should be treated with the best vasodilator that we have, and that's nitric oxide. We'd feel uncomfortable about those babies getting the control arm of the trial and being treated with a lesser drug so we are now not going to enrol those babies. Doesn't amount to very much but that particular sort of baby will not now be part of the trial [in this unit and] will automatically get nitric oxide. ...
>
> CS: But you feel you're still in a position of equipoise?
>
> Dr #25: We are in pre-term babies ... The biggest trial of term babies with nitric oxide was published a few years ago and we'd been waiting for the follow-up, because this was the big question, it might work in the short-term but is it safe in the long-term? We had the results in abstract form of this follow-up study a year ago and people at that time pointed at this and said "Look, this is evidence that it's safe as well as effective in the short-term." We've been hovering for a long time about these more mature babies and the definitive article was published last month. This obviously gives us more information ... and although it's not perfect information to say that it's definitely safe, it's more information in that direction and we made a decision yesterday that we wouldn't be randomising any more term or near-term babies, based on that paper. It might be a question we need to revisit if there's other studies that come out but this sort of external evidence, I think does influence you, and I think rightly so. It should influence both us [and] the steering committee. ... We need to question whether we're giving the right treatment package ... and whether that means randomising or treating. That's important. So it's been a difficult decision and I know a lot of other people have come to that conclusion some time ago and have been pointing to us and saying, "We told you so some time ago and you've taken a year" ... but we felt it was worth waiting for the article and doing our own critical evaluation of how good that study was.

This process of creating a local policy, based on the collective decision of the consultants, served to re-establish rules on who should and should not be offered enrolment to the INNOVO Trial. It was evident that in all of the NICU'S in this study, there were periods in which the rules about who could be recruited to the trial had been unclear. This is reflected in the accounts that many of the neonatologists gave of their struggles with the clinical restrictions imposed by the INNOVO Trial protocol.

Part III - Clinical judgements; a focus on decisions over the use of INO within and without the INNOVO Trial

The INNOVO Trial neonatologists often talked about the need to make clinical judgements about whether or not individual babies should be recruited into the trial, a concern which was rarely raised for the CANDA Trial[42]. Once recruited, further decision-points could arise. For babies allocated to the control group, some neonatologists felt that at times they were faced with a decision over whether or not to comply with the allocation, and whether to continue to abide by the allocation should the baby deteriorate. The INNOVO Trial protocol is clear about how the control arm should be managed. "If a baby is randomised to the "ventilatory support without INO" group, he or she should not receive INO at a later stage i.e. there should be no cross-over" (INNOVO Protocol 1999). A decision to administer INO outside of the trial, or to administer INO to a baby in the control group, would represent a decision to suspend collaboration with the trial with reference to that particular case.

In the early stage of the pilot study for the INNOVO Trial, Nicholl described the use of INO outside a trial as a very real problem, stating that:

> INO is being routinely used in many UK neonatal units, without the safeguards implicit in participation in a clinical trial ...[despite the fact that] the possible long-term side effects of INO are not known (Nicholl 1997).

At the start of the main study of the INNOVO Trial, there was concern that INO would be adopted as standard practice without appropriate evidence of efficacy and safety, and that a trial should be conducted "before the window of opportunity closes" (INNOVO Trial Protocol 1999).

Data collected in the course of the trial indicate that INO was being used outside the trial, but also that attempts were being made to comply with the protocol and avoid its use. A log was maintained to record the numbers of non-participating trial-eligible babies who were treated with INO outwith the trial in neonatal units which had agreed to collaborate. The log indicated that during the recruitment period at least 75 preterm and 163 term babies were treated in this way. There was clearly less equipoise for the

[42] Where this concern was raised it was not generally expressed in interview as a clinical judgement. It almost always related to issues of whether consent was appropriate given parental circumstances.

term babies, although the numbers were inflated by the returns from one large hospital not involved in the qualitative study.

Within the trial, seven of the 84 babies allocated to INO did not actually receive INO, three because they improved and four because they died before it could be administered. In addition, of the 84 babies allocated to the control arm, there were 10 cases where INO *was* administered representing cross-over, prohibited in the trial protocol. INO was the only vasodilator about which the trial protocol was prescriptive. Other vasodilators (such as magnesium sulphate, tolazoline and prostacyclin) could be given at clinicians' discretion. As shown in Table 6, this discretion was more often exercised for those allocated no INO (cross-over and use of other vasodilators highlighted.

Allocation	**Treatment**	**Preterm babies**	**Term babies**	**Total in trial**
Allocated INO (N=84)	No INO	3	4	7
	INO	52	25	77
	Other vasodilator	5	7	12
Allocated no INO (control) (N=84)	No INO	49	25	74
	INO	4*	6*	10
	Other vasodilator	16	15	31
Total recruited		**108**	**60**	**168**
non-participant eligible babies	INO	75	163	238

* In 2 cases cross-over occurred when the baby was transferred to another non-participating unit

Table 6 – Allocation, cross-over and the use of vasodilators in the INNOVO Trial.

Analysis of the interview data could be used to explain some of the decisions that were made about cross-over and treatment outwith the trial, and the efforts that the neonatologists made not to break with the trial protocol. This could in turn illuminate larger questions about professional perceptions of care and research and their responsibilities to their patients.

The approaches of different neonatal units

As accounts of decisions about cross-over and treatment outwith the trial were very varied across the sample, it is helpful to gain an overview of how the different NICUs (A-D) dealt with this issue. The explanations given by the four Local Principal Investigators (LPI) of how they would deal with a situation where parents request the use of INO, and with parental preferences for INO on allocation to control, are presented in Boxes 4-7 below.

NICU B - Int.15

I usually put it in terms where we don't really have any choice, to be honest. That for example with nitric oxide, I'm saying that the babies we're giving it to, because we are ... concerned that we might not be right, we are randomising them. So if people don't want to go into that trial, that's fine. We'll say, "Right, we won't use nitric oxide, we'll use something completely different". So I haven't really given them the option of saying "Well we'll just have the nitric oxide", because we won't do that. ... So far I haven't had anybody come back to me [and say] "Well, I'll just have the nitric oxide

(NB This neonatologist had not encountered the issue of preferences expressed on allocation to the control arm)

Box 4 – View of Local Principal Investigator for NICU B

NICU A – Int.2

Dr #2: If parents have said "Can I have ... nitric oxide... outside of the trial" then the answer has been "Yes, technically you can in this centre because we offer it, but I ... would prefer the children receiving nitric oxide to receive it within the context of a trial", but no we haven't said that they can't have it here. .... If you make a unit policy that nitric oxide is only going to be available within the trial, end of story, then it's quite straightforward to progress when you are talking about randomisation. If your child doesn't get nitric oxide within the trial, he or she will not get nitric oxide, full stop.

CS: That's your position here is it?

Dr #2: No, it isn't our position here. It is *my* position here, if you like, but if a parent were to ask me "Can my child be given nitric oxide outside of the trial in [this centre]?" ... can we physically supply it and give it, the answer is yes ... so I think it wouldn't be 100% honest to say that we couldn't give it outside the trial. So what we say is we really only want to give it within the trial because we think that's the best way to determine the usefulness of this drug, but it means there's a hint of an option that if the baby doesn't do well on air [if allocated to the control group] that we can cross over, and I think that's where some of the confusion lies.

Box 5 – View of Local Principal Investigator for NICU A

NICU D – Int.25

Dr #25: If it was a term baby and the parents insisted on having nitric oxide, that's akin to saying that they're denying consent for the trial. We'd be left with a baby who couldn't go into the trial. We would probably use nitric oxide. I'm sure I would personally but we haven't got a policy for that[43]. Now, preterm babies, much more difficult. It would depend ... how strongly we felt nitric oxide was likely to work ... on that particular baby [and] what the chances were for that baby without it. But we would be prepared to use it outside of the trial.

CS: Right. How have you found it for yourself and for parents when babies have been allocated not to receive nitric oxide?

Dr #25: Most of them I don't find it a particular problem, because [there are] very few situations [where] I feel that, because of the physiology, that you should give a particular drug like nitric oxide to that baby. Having said that, last week we had a baby who was exactly in that situation, wasn't given nitric oxide, but the physiology when we did a heart scan and looked at the x-ray suggested that one drug more than any other would be [useful]. Nitric oxide is a vasodilator and there are other less useful but similar drugs available and the INNOVO trial says you can use all those other drugs. We had a situation where a few of the consultants got together and if it had been someone else on [duty] I think we might have treated with nitric oxide despite [the baby] being in the control group, ... as a rescue treatment. The way we played it was that we used one of these lesser drugs, which had a similar effect but isn't as good as nitric oxide.

CS: If the trial was not running would you have made the same decision to use the drug you used or would you have turned to nitric oxide?

Dr #25 Oh, without doubt we'd have used nitric oxide.

CS: Did you feel comfortable with using the lesser drug?

Dr #25: It wasn't ideal but for the greater good of the trial itself we think it's important not to muddy the waters by using nitric oxide and there was an alternative.

Box 6 – View of Local Principal Investigator for NICU D

[43] It was in fact the case that the LPI was interviewed two weeks before the policy decision on the exclusion of mature babies was taken. The LPI's account is included here as it demonstrates the views of someone at the edge of equipoise.

NICU C – Int.14
CS: How much is the situation affected by how much you feel the parents might want the treatment? DR #14: It varies. For example if I had a baby of parents who were in their mid-forties, perhaps had ten goes at getting pregnant and they'd got as far as a twenty-five weeker, and that was going to be it, I would pull out all the stops and I think that would probably stop me randomising the baby, I think I might try a treatment. It's rare you're in that situation but I think that .. because as I say primarily with clinicians, if you think something might work you will try. I might use a different approach to [those] parents and say "Look, there is this treatment, we don't know if it works, we really don't know. There is a trial going on but I do not want to take the trial [in case] the baby won't get the treatment". ... I would ask [the parents for their] specific permission to use it out with in that situation. CS: What decision did you make departmentally about how to manage situations where a baby's allocated to the control group, did you have an option to then give nitric oxide if you wanted? DR #14: Yes. CS: Have you ever had parents who've specifically asked you to do that? DR #14: No. We've randomised fairly few babies here and the babies that are randomised are the ones in where .. there is less evidence for a benefit[44]. CS: So the ones where you haven't felt you wanted to use it? DR #14 Yeah ...

Box 7 – View of Local Principal Investigator for NICU C

These extracts give an indication of the different approaches that exist. In four different centres, the four LPIs each take a different approach. In NICU B the preference is to restrict the use of INO to within the experimental arm of the INNOVO Trial, with a clear rule that rejection of the trial means that only the alternative vasodilators may be used. In NICU A the LPI would like to see INO restricted in the same way, but given its availability prefers to encourage parents to join the trial with the possibility of cross-over to INO should the baby struggle if allocated to the control arm. In NICU D for term babies parental preference would lead to treatment outwith the trial with INO, a position which was soon to be changed to automatic consideration of INO as a treatment option. Where preterm babies were enrolled onto

[44] That is they are the preterm babies.

the trial, for those allocated to the control arm it was considered necessary, where possible, to maintain the allocation and in this NICU alternative vasodilators would be used. A clinical judgement could, however, be made based on individual physiology, which may or may not result in the use of INO. In NICU D the LPI suggested that their approach is variable. He described a situation where INO would be used outwith the trial, based to some extent on emotional needs of parents.

The views of the neonatologists

It is evident that NICUs do not always have clearly defined policies on how to react to particular situations. When the responses of the larger sample of neonatologists are taken into account, the variability increases. It was however possible to identify several key themes in the analysis, all of which are touched on in the comments of the LPIs. They suggest that decisions about treatment outwith the trial are a product of:

- conditions set by the trial
- strategic thinking about the implications of enrolment
- responses to the use of alternative vasoldilators
- a view of professional responsibility and the need for action

Conditions set by the trial

There were a number of key elements in the clinical and the trial situation which helped to shape the decisions that were made about the use of INO. Although most were familiar with the possibility of toxicity and long-term risks, INO was often seen as a desirable and potentially useful treatment in adverse circumstances. As indicated in the extract from the clinical literature cited above (Finer 1997), INO was already being described in positive terms albeit with certain provisos. It was available in each NICU and although its administration could be tricky, this did not appear to be a deterrent for the interviewees, many of whom had experience with using the gas. As in the ECMO Trial, the control arm did not involve an additional treatment, and the trial was not blind, both of which could make it difficult to face parents if there was a professional or a parental preference for INO.

A consultant described how it could be very tempting to use INO given that both the gas and the means of administration were readily available.

> It was easier with [the] ECMO [Trial] because access to the treatment could only be within the study. ... INNOVO of course has been a bit more fraught, because you don't have to send the child off [to a specialist centre]. ... So it is more difficult if a child is becoming progressively more hypoxic and awful. At some point you're quite likely, at the very least, to break protocol to try the child on nitric. ... INNOVO is a very interesting trial. I had considerable difficulties myself with it. I had enough equipoise to join it but I could see enormous logistic and scientific difficulties with it, because of the fact that it was too easy to break ranks and give the nitric anyway. You don't have to have very much of that and you have one invalid trial. (Int.28)

The nature of this difficulty was explained by a registrar.

> If you know [of] anecdotal reports of babies responding to a drug in the short-term and if a baby in the short-term is going down the pan, then can you stick to the [allocation to the control group]? ... Because it's available in so many places now, you almost feel as though you are depriving that baby by putting them on the trial. That's where I feel a huge amount of discomfort with the INNOVO Trial. [Waiting to] see what the baby gets ... you're just sitting there thinking, 'God I hope this baby is [allocated to INO] ... You've just looked at the parents ..., they sit there, they think about it and think, 'Actually this drug sounds good.' and you're offering them this little ray of hope and then afterwards you're saying, 'Oh sorry, they're not going to get it.' I'm quite happy I've only had to recruit the one patient. (Int.8)

The choice not to blind professionals and parents to the allocation was mentioned as a complicating factor in several interviews. It was suggested by a consultant that had the trial been blinded, cross-over and administration of INO outwith the trial may have been less of an issue.

> Dr #2: I had some issues with the trial. ... I think the lack of blinding which was done for very good reasons, has made it more difficult, ...[as well as] its physical availability outside or inside the trial ...
>
> CS: Would you have liked to have seen it blinded?
>
> DR #2: I think it would have been easier for us ... and I think the parents, because to say, you know, if you [put] your baby into this trial and he or she may or may not receive nitric oxide, but neither you nor I will know, then in one sense, we're absolved from this option that we have, that if things didn't work out, we've got a cylinder standing here and ... we could actually give it... I think that's quite difficult.
>
> CS: You said for parents as well. In what way do you think it would make it easier for parents?

> DR #2: Because I think if all they've got is a black cylinder unlabelled and the child is getting worse, they won't know that they were already getting the drug or [not], so I think they won't know whether they had more to gain or lose by changing.

Strategic thinking about the implications of enrolment

Some interviewees touched on ways in which strategic thinking around the INNOVO Trial shaped which babies were considered for enrolment and at what point in their care, and which would be treated outwith the trial. This could relate to a judgement about the use of INO itself, or to the possible impact of enrolment in relation to the use of other treatment modalities.

The vast majority of the evidence derived from this study suggest that this group of neonatologists were either in equipoise, seeing both potential advantages and disadvantages, or they were not in equipoise, viewing INO positively. In one interview there was however, some suggestion that concern about using INO may have affected recruitment decisions.

> If you measure [the] oxygenation index, how much breathing support a baby needs, there are some that as soon as the baby has reached that criteria will say, "Okay, well, let's consider nitric oxide now as part of the INNOVO study." Some will let that figure double, triple, quadruple before they even begin to think about it. I think that's partly because of lack of familiarity with the equipment, the circuit, the gas itself. (Int.26 registrar)

As the trial involved wide diagnostic criteria it could be possible for a baby to fit the eligibility criteria for some time. There may have been delays in consideration of the trial within this period of eligibility while staff first tried everything else at their disposal[45]. Such delays could lead to a situation where a baby deteriorates to a point where recruitment to the trial is untenable.

> If we think that a baby looks like it needs nitric, we would give it nitric, because by the time you've got to a threshold where you actually need to give nitric, you can't afford to wait and see what the baby does if you don't give it nitric. Because we know that on the whole if you've got a baby in dire straits, and [it is] the sort of

[45] Informal discussions with staff in ECMO centres suggested that this also happened in the ECMO Trial.

> baby who does need nitric, then nitric at least in [the] short-term gets it better. We don't know about long-term. (Int.19 consultant)

One registrar stated that in a smaller non-trial centre where he had previously worked, colleagues were reluctant to refer babies on to their local specialist NICU precisely because that NICU was collaborating with the INNOVO Trial. Rather than exposing the baby to what they saw as the risk of randomisation to the control arm, they would chose to maintain control of the case. Crucially this neonatologist (and presumably his colleagues if his account of their practice is accurate) erroneously felt that allocation to the control arm would preclude the use of any vasodilator.

> I'll give you an example from a hospital where I worked. Small baby, pulmonary hypertension, persistent hypoxia. This [would] be a candidate for randomising. However, you know that if you randomise the baby [there is an] equal chance that they may not get it, and this baby doesn't have no other option. So you stick with other vasodilators, give magnesium sulphate, give tolazoline, give prostacyclin, and try to improve their situation. There is some reluctance to recruit, yes. (Int.17)

After further questioning he added:

> They may not be transferred to [this hospital] because ... they would be recruited into the trial and they will get nitric only as part of the trial. (Int.17)

The neonatologists sometimes argued that an inherent difficulty with the INNOVO Trial was that the control arm offered no obvious change in the management of a baby. As with the ECMO Trial it could be perceived, by parents and by professionals, as doing nothing. Decisions to treat outside of the trial commonly related to the clinical decision to administer INO directly rather than taking a chance on not being allocated to INO. In one interview however the situation was presented differently, implying that a decision not to recruit to the trial could relate to a judgement about the additional option of ECMO.

> It would be difficult because once they've reached the end of the road on the ventilator ... you've then either got nitric oxide or ECMO. What tended to happen was that the babies who probably just needed a bit of help but were likely to pull through would be randomised to the [INNOVO Trial] and the babies that were obviously just going downhill rapidly tended to be referred for ECMO. ... So it was almost a subconscious decision with most people on the unit, ... If you really wanted to properly answer the nitric question all the babies at that stage should

> have [gone into the trial] which would have allowed the trial to answer whether it was useful. (Int.24 registrar)

For a consultant at a different NICU the focus was not on rejecting the trial in favour of ECMO but on the value of avoiding ECMO through the use of INO.

> I find it quite difficult getting consent on some term babies where we know that it can avoid those babies being treated with ECMO. ... At the moment we're still recruiting babies to INNOVO, even for term babies, and that creates some difficulties. I find it quite difficult to put myself in those parents' position because I think if I was the parent making that decision and with all the knowledge that I have, I wouldn't like my baby to be put in the trial. I'd just like it to receive nitric oxide. When [term babies are] randomised to not receive nitric oxide. ... you can't help thinking ... I wish he'd got the treatment. ... I wish they weren't in the trial. We'd have something else to offer them. Of course the next thing that we can offer them is ECMO and we know that's an effective treatment ... but it's a less good option in some ways because it involves transfer to another hospital and involves an invasive surgical procedure. (Int.27)

These accounts suggest that strategic thinking about the broader context of care and the alternative options could lead to selective forms of recruitment or exclusion, in particular for those babies of at least 34 weeks gestation, the lower limit for consideration for ECMO, and the type of baby (near term or term) which was thought most likely to benefit from INO.

Responses to the possible use of alternative vasodilators

According to the INNOVO Trial protocol, the alternative vasodilators, magnesium sulphate, tolazoline and prostacyclin, could be used for babies in the control arm of the trial. These vasodilators could also be used where there was a policy of prohibiting the use of INO outwith the trial when trial participation was rejected. Although this was the policy in NICU B, none of the neonatologists in the study reported that such a case had occurred in their experience, although several described discussions which had taken place on this subject. Opinions on whether the other vasodilators were appropriate alternatives to INO varied. The option of using other vasodilators was taken up for 31 babies who were enrolled in the control arm of the trial, in order not to break with the allocation, as shown in Table 6 above.

In NICU D the consultants had made a collective decision to add their own local limitations to the eligibility criteria for the trial, considering preterm babies as eligible but treating more mature babies with INO. A consultant from NICU D gave an example of cases where difficulties arose.

> Dr #23: We've had one or two babies where we were randomised to control but we wanted to give a vasodilator, so we gave another vasodilator that wasn't nitric-oxide.[46] Then we thought, hang on, we're giving this other vasodilator where's there is no randomised trial or evidence for it's efficacy, but lots of anecdotal, historical personal experience. We've used that. It's had the same effect that nitric-oxide probably would have had. Aren't we barmy going for a second best just because the trial has randomised for the child not to have that! So we've altered quite a lot of our view of the INNOVO Trial based on that experience.
>
> CS: I guess it's an interesting question as to how trials fit in with clinical freedom?
>
> Dr #23: Yes but I think to our credit I suppose, we've been able to recognise that as time's gone on, rather than just blindly randomising everybody, or blindly doing illogical things once the child is randomised. We recognised that this is an issue and changed with time, which must be an evolutionary thing.

A registrar suggested that other vasodilators could be used for those allocated to the control arm, but for a slightly different reason.

> Dr #26: In those patients who haven't drawn nitric oxide we do sometimes try some magnesium. ...I don't know whether that's to make us feel better or not.
>
> CS: So that's presumably to make the parents feel that you're still striving to do something.
>
> Dr #26: It might even be to make us feel like we're striving. I don't think there's much evidence for magnesium working in very prems, but no, I don't think we'd do it just to make the parents feel better, I think that all we want to be doing is something more.

Professional responsibility and the need for action

A very common point in the interviews came when the neonatologists described a critical situation where they felt that it was crucial to act decisively. The registrar just quoted described such a situation.

---

[46] The statement that "we were randomised to control" reflects intense professional involvement in difficult cases and the way in which randomisation shapes the options at the neonatologists' disposal, as well as determining the intervention that the baby will or will not be given.

> If you've got a child who's absolutely at death's door ... you are saying to [the parents] there's a faint hope that this thing might work and we don't know if it's good, we don't know if it's bad. The only trouble is if they don't get enrolled to it they don't get it at all, then there's nothing. They are in status quo, and status quo is their child's about to die. (Int.26)

The use of INO as a rescue therapy outwith the trial in extreme circumstances was presented by some as wholly appropriate, the obvious thing to do.

> We just put [the baby] on nitric because he was so sick that we just felt there's no point in trying to randomise, we'd just got to try everything. (Int.20 registrar)

> If it was my decision, if I actually thought it may be beneficial then I might try it outside the trial, because if you're losing the battle then you may as well use every tool you've got in the shed. (Int.9 registrar)

In some interviews there was a sense of the tension that could underlie the decision to suspend trial collaboration and to treat outwith the trial, here described by a convinced trial collaborator.

> It may be a treatment which you think will be useful in a particular baby, and yet if you recruit the baby into the trial then they've only got a fifty percent chance of receiving the treatment which you think might be beneficial. Now that situation ... can generate some conflicts. You want to contribute to the trial and to recruit enough patients to get the answer to the question as to whether it really is effective or not ... but on the other hand you want to do the best for the baby that you're dealing with at the time. ... Your instinct as a clinician is to try to give a treatment to make things better, even if it's not completely proven, because you think it might make a difference, particularly in a life-saving situation. ... I think that in general if we don't know whether a treatment is effective or not then the best way to answer the question is by randomised control trials. If we've got some evidence that the treatment works and a baby's about to die if we don't give a particular treatment there's strong argument for using the treatment outside a particular trial. Nitric oxide hasn't been proven ... to affect mortality but it improves babies' oxygen saturations in the short-term and essentially when that's the baby's major problem you can't help but feel that it's going to make a difference to that baby's longer-term rather than just short-term outcome. (Int.27 consultant)

Discussion

The neonatologists indicated a high level of commitment to trials and felt that they ought to, and wanted to collaborate, even when they found the discussions with parents difficult. The decisions that they made to collaborate were driven by commitment to the generation of evidence which would benefit future populations, and by the possible benefits that trial participation may have for individual participants. The decisions about suspension of collaboration were all made with reference to their views of the best interests of individuals. In no instances did the neonatologists suggest that suspension of collaboration represented a lessening of a sense of commitment to the CANDA or INNOVO trials, or to research more generally.

For the CANDA Trial, when the discussions were thought to be too onerous for the parents, many of the neonatologists felt it would be appropriate to suspend trial collaboration for that case[47]. Mostly they appeared to feel that they either did so, or would have done so had they encountered that situation, with a sense of ease. This may have been precisely because the neonatologists were in equipoise and it was generally felt that involvement in the CANDA Trial would largely accrue benefits for future rather than present babies. Any personal benefits which might be gained through trial participation (increased attention, the possibility of closer monitoring) would be offset by the potential cost to parents of having to consider information about the trial during a late stage of labour.

In contrast, it was shown in Chapter 5 that the INNOVO Trial was often used with therapeutic intent with individual patients being the intended beneficiaries of the decision to collaborate in their case. There was evidence that the levels of equipoise for the INNOVO Trial were more variable than for the CANDA Trial, with very different perceptions of associated risk, and this was directly related to whether INO was viewed as a desirable therapy or as an unevaluated intervention. In this chapter it was shown that collaboration with the trial could be suspended in individual cases for

[47] It should however be acknowledged that, as shown in Chapter 5, some of the less senior neonatologists felt obliged to abide by the unit policy of approaching parents. For them the choice to suspend collaboration may have been less likely.

the same therapeutic reasons that could underpin the choice to utilise the INNOVO Trial. This could be to some extent independent of the prevailing levels of equipoise. When babies had advanced to a stage where there were few other options available, the emphasis on the role of research within a caring situation could shift even for those with a clear view of the evidence and a commitment to the trial. In this situation the trial could become a barrier to treatment and would be circumvented. Essentially the balance of evidence and the need for something that might help, could tip. The need to care for a child would become paramount, and equipoise and a trial secondary. For the majority there was a recognition that there are situations where it is "tempting" (Int.28 consultant) if not wholly ethical to act outside the strictures of a trial protocol.

It was however interesting to note how some interviewees held firm in this difficult situation and did not see the use of INO outwith the trial as serving the best interests of individual babies. Those taking this position tended to be the more senior neonatologists with more decision-making responsibility within the NICUs and those with some particular responsibility to trials. As their exposure to trials gave them an appreciation of the theoretical and ethical underpinnings, their own convictions about the ethical framework of research could prevail. For Dr #25 for instance, the equipoise that led him to join a trial also meant that he would not have a preference over the allocation, even for the sickest of babies. He argued that it also meant that he felt no discomfort or responsibility for a poor outcome as he would have acted ethically in the light of the best available evidence at the time. When the evidence-base changed, as it did for term babies in the course of the INNOVO Trial, he felt that the most appropriate course of action was to redefine with colleagues the conditions of local participation. This could be seen as a partial suspension of collaboration. It did not represent a diminishing of commitment to the trial more generally. With the redefinition of local entry criteria in place, equipoise for the reduced pool of eligible babies was thought to be tighter and clearer. It was however out of step with the views of the trialists whose collective view of the evidence led them to continue to include term babies throughout the course of the INNOVO Trial. This would suggest that equipoise which is so influential in these settings, is a highly complex shifting entity which operates at individual, local and community levels.

Chapter 7 – The decisions that parents make to accept participation in the CANDA or INNOVO Trials

The direction of inquiry

An important element of the structure of this research is the ability to examine how different parties experience and interpret the same events. Their accounts not only provide insights into their own decisions, they also shed additional light on those of their counterparts, illuminating elements of decision-making which might not be available from a single perspective. In considering these two positions the researcher gains a rare overview on their convergence and divergence from an external perspective.

The structure also permits cross-referencing between the data from the two parties to guide particular lines of inquiry. The interests, concerns, insights or even lack of insight of one party can suggest areas of analysis in the accounts of the other which would not necessarily have been evident from the external perspective. Essentially the interviewees themselves can guide the researcher towards key issues which might otherwise be overlooked.

This chapter is shaped by these internal and external vantage points, exploiting the broad potential of the interviewees to direct the inquiry by pursuing an issue identified during the analysis as being of particular concern to the neonatologists. Firstly to promote comparison parental decisions are considered in the same format as the neonatologists' decisions, that is why they made their particular choices and how they related to the trials involved. Secondly the data are explored in the light of anxiety expressed by some neonatologists that parents often make over-rapid decisions about trial participation.

The neonatologists' concerns

It was evident that the neonatologists felt a degree of anxiety over the circumstances and quality of the consent or dissent that was given for the INNOVO and CANDA Trials. Every neonatologist in this study has had to negotiate what they themselves saw as problematic situations in order to discuss trials with parents and all spontaneously expressed this concern. They were well aware of the difficulties that parents experience when they are given complex and often frightening information about prognosis, treatment, and a trial in a context of preterm delivery or neonatal intensive care. They described a number of additional factors which they felt complicated the process and could further compromise the quality of consent, such as their own time constraints, inexperience with trials, and feeling under-prepared to talk to parents.

The neonatologists also expressed concern that some parents make hasty judgements about trial participation, and that fast decisions may be made without full consideration of the trial information. Two comments are broadly representative:

> If they don't have any questions or they just say yes straight away, I'm fairly anxious that they may not have understood what we're talking about. (Int.16 consultant)
>
> They don't listen to your explanation, they almost say yes before you've even finished telling them about the trial. (Int.9 registrar)

Another neonatologist expressed unease and frustration over this situation, saying: "I don't like it when they won't listen" (Int.15 consultant). Some saw this fast pace of decision making as a result of parental type - "Some parents don't even particularly want to understand the details of what's going on" (Int.27 registrar) and some saw it as parental trust leading to hasty acquiescence - "There's 25% who don't want to engage in the process and just say, "Yes, alright, you go ahead."" (Int.15 consultant)

Although it was widely acknowledged that consent in difficult circumstances can be compromised, the neonatologists were particularly concerned about those parents whom they felt do not engage in a two-way process, and make hurried decisions. This

suggested that exploration of the parental data should take particular account of the speed of the decision-making process. This chapter therefore examines parental decisions with particular attention to the factors affecting the speed of those decisions and seeks to understand whether parents shared the neonatologists'concerns.

Part I of this chapter describes the background and the immediate circumstances of consent, and reports parental accounts of the speed at which they felt they made their decisions. Part II describes the reasons parents gave for making faster and slower decisions. Part III explores possible links between speed of decision-making and parental perceptions of trial-related risks. This chapter largely focuses on the decisions to consent to participate. There are however four cases where parents declined trial participate which are alluded to throughout this chapter. Their choice to decline the trial is considered in detail in Chapter 8, irrespective of the speed at which that choice was made.

Part I - Parental circumstances and the speed of decision-making

The background to parental decisions

Thirty-eight parental interviews were carried out, representing 40 decisions, (21 INNOVO, 19 CANDA); 36 were to accept trial participation and four (all CANDA) were to decline. Table 7 links pseudonyms (partners who were not interviewed are represented in brackets), and interview numbers with the trial in question, the decision that they made, the allocation where known[48] and outcome.

The majority of the women (N=33) gave birth to one baby. In three of the five cases of twins or triplets, one or more died. Most of the women gave birth prematurely (N=31). Half of the women (N=19) underwent a caesarean section (CS), most as emergencies (N=15), nine under general anaesthetic (GA).

[48]Missing allocations reflect the fact that some parents did not know which surfactant was administered.

Trial	Int.	Pseudonyms	Allocation	Outcome
CANDA & INNOVO	41 69	Kerry (& Ron)	CANDA - not known INNOVO - INO	Survived
CANDA & INNOVO	42 70	Joyce (& Seb)	CANDA – not known INNOVO – control arm	Survived
CANDA	43	Fiona & Geoff	ALEC	Survived
	44	Zoë & Bernard	Curosurf	Survived
	45	Wendy & Derek	not known	Survived
	46	Maureen & Charles	not known	Survived
Declined	47	Shelley & Evan	not applicable	Survived
Declined	48	Gillian & Kelvin	not applicable	Survived
Declined	49	Janine (& George)	not applicable	Survived
	50	Freda (& Nigel)	Twin 1 - Curosurf Twin 2 - ALEC	Survived Survived
	51	Jill (& Eamonn)	Curosurf	Survived
	52	Tape corrupted		
	53	Mona (& Daniel)	Curosurf	Died
	54	Eve & Balfour	not known	Survived
	55	Glenda & Robert	not known	Survived
	56	Gina & Matt	not known	Survived
	57	Cathy & Kevin	Curosurf	Died
	58	Teresa & Simon	Curosurf	Survived
	59	Linda & Douglas	Triplet 1 ALEC Triplet 2 ALEC Triplet 3 Curosurf	Died Died Died
Declined	60	Cilla & Terry	not applicable	Survived
INNOVO	61	Trisha & Michael	control arm	Survived
	62	Nicky & Donald	INO	Survived
	63	Kate	control arm	Survived
	64	Dorothy & Bryan	INO	Survived
	65	Isobel & Roger	control arm	Survived
	66	Julia & David	INO	Survived
	67	Elaine & Keith	INO	Survived
	68	Rebecca	INO	Survived
	71	Sheila & Len	control arm	Survived
	72	Frances & Rodney	control arm	Survived
	73	Esther & Mark	Twin 1 INO Twin 2 not enroled	Survived Survived
	74	Cheryl	INO	Died
	75	Carly & Peter	Twin 1 control arm Twin 2 not enroled	Died Survived
	76	Belinda	Twin 1 INO Twin 2 not enroled	Died Died
	77	Heather & Jeremy	control arm	Died
	78	Lorraine	control arm	Died
	79	Judith & Sean	INO	Died
	80	Erica & Howard	INO	Died
	81	Tessa (& Bill)	INO	Survived

Table 7. Pseudonyms and interview details

For some of the women whose babies were born prematurely, delivery came after a worrying period as an inpatient, aware of the need to "hold on" for even one extra day. Those experiencing the potentially debilitating effects of pre-eclampsia often spent quite some time as an inpatient, with risks for themselves and their babies increasing as their condition progressed. For all of these women time eventually ran out and labour was induced or a caesarean section ordered, sometimes to their horror, sometimes to their relief. The women whose pregnancies were unstable, with bleeding and intermittent contractions could move in and out of labour on almost a daily basis. Those who arrived at hospital in established preterm labour often underwent a period of staff trying to stop their contractions but then had to adjust to the idea that their baby would be delivered extremely early. For those who experienced placental abruptions it could be a shocking and rapidly moving event. The women often found themselves in dramatic situations, being taken to hospital or transferred between hospitals by ambulance, or facing an emergency caesarean with a GA and their partner excluded from the delivery. Such events made the seriousness of their situation very clear. Difficulties for term babies could arise at delivery, (meconium aspiration) or some time after the birth (streptococcus B infection, persistent fetal circulation). For these babies there could be immediate or delayed complications, a rapid decline or a slow deterioration.

A number of the women were extremely ill themselves, with pre-eclampsia, with major haemorrhages, or with postnatal complications such as retained placenta or infections. In some instances there was a significant threat to a woman's life.

For the fathers there were several complicating factors. For some this was their first experience of labour and delivery, for which they could be ill-prepared. They could witness distressing events and feel excluded and powerless. If the couple had older children they often had to arrange childcare at short notice and this could limit the time that they were able to spend with their partner and baby. Where babies were transferred to another hospital, or when the mothers were very ill, fathers had to choose between their sick baby or their sick partner. Some took the lead in the decision about trial participation when their partner was unable to engage fully in discussions and a small number made the decision without their partner being present.

Some were emotionally overloaded and became angry, distant or absented themselves from the processes involved in the delivery or care of their babies.

Reproductive histories could add to stressful circumstances. For some parents there had been a protracted period of trying to conceive. In 5 interviews (51, 57, 59, 72, 83) the parents stated that they had used assisted conception. In 9 cases the parents had a previous loss; a miscarriage (47, 49, 53, 76, 77); terminations for abnormality (61), stillbirth (43) or the death of a preterm baby (56, 81).

These difficult circumstances provide the context in which parents decided about trial participation. They are summarized in Table 8 below.

	CANDA	CANDA & INNOVO	INNOVO	Total
Number of babies				
Singleton	15	2	16	33
Twins	1	-	3	4
Triplets	1	-	-	1
Timing of delivery				
premature	17	2	12	31
term/near term	-	-	7	7
'Cause'*				
early labour **	9	-	7	16
pre-eclampsia	4	1	-	5
strep infection	1	-	6	7
placental problems	3	-	3	6
meconium aspiration	-	1	3	4
Hydrops	-	-	1	1
Unexplained cause	-	-	1	1
Mode of delivery				
vaginal delivery	9	1	11	21
emergency CS:GA	4	1	4	9
emergency CS:SB	3	-	3	6
planned CS:SB	1	-	1	2
TOTAL CASES	**17**	**2**	**19***	**38***

*figures do not add up as more than one cause coded **contractions, bleeding, ruptured membranes
GA = general anaesthetic SB =spinal block

Table 8. Parental circumstances around decision-making

Location and timing of discussion

An important element in the decision-making process is the location and the time available for consideration. The three main locations were the antenatal ward (CANDA), the delivery room (CANDA), and the NICU (INNOVO). In two cases (CANDA) the location of their discussion was not clear.

Antenatal ward

In 4 cases women and sometimes partners were informed about the CANDA Trial as inpatients, in a relatively settled period if early labour had stopped, or while being monitored for the effects of pre-eclampsia. There was time to consider information and discuss the trial with a partner or family. In this setting decisions were made in the light of a *possibility that their baby may be delivered early.*

Delivery room

Thirteen women and sometimes partners were informed about the CANDA Trial in the delivery room during labour. They were anxious and the mothers were often in pain. Most were given information about the likely difficulties their baby would face and some had discussed the chances of survival. Decisions made in the delivery room were in the light of the fact that soon *their baby will be delivered early.*

NICU

In 21 cases parents discussed the INNOVO trial when their baby was critically ill on a NICU. Their circumstances varied: some babies were born ill and were ventilated immediately, some deteriorated gradually; some parents had witnessed their babies undergoing complications and unpleasant procedures, and had experienced the highly stressful NICU environment without signs of progress. In other cases events could move at a horribly fast pace. All, however, had in common stress and anxiety that their baby would die. If the trial was discussed on the first or second day after delivery, then the women were experiencing the more acute after-effects of delivery and both parents were often sleep-deprived and deeply fearful. Decisions made in the NICU were in the context of the worst-case scenario - *the babies were all critically ill.*

These locations are summarised in Table 9.

LOCATION	CANDA	INNOVO	TOTAL
Ward – settled	4	-	4
Delivery room (active labour, imminent CS)	13	-	13
NICU	-	21	21
Info. unavailable	2	-	2
TOTAL DECISIONS	**19**	**21**	**40**

Table 9 - Location of decisions

Seven tape recordings were made of conversations between neonatologists and parents where trial enrolment for their baby was offered. Although this element of the study was discontinued, the available tapes give some indication of the circumstances and the types of discussion which took place in two of the three locations. Summaries and extracts from two recordings are given, one for each trial, but presented with the caveat that the extent to which they are representative of other discussions is unclear, given the limited range of evidence within this study.

Extracts from a transcript of a recording of consent for the CANDA Trial during active labour are presented in Box 8. As the woman involved was not interviewed it is not possible to comment further on how she later saw this situation. From the transcript it seems that the information and the responsibility for making a decision was very much directed towards the labouring woman. It is very noticeable not only that she makes very few comments, but also that her partner does not audibly engage in the process. Extracts from the transcription are presented in italics.

Consent during active labour

The neonatologist starts to describe the CANDA Trial but is interrupted after 40 seconds by a 90 second contraction. The mother can be heard using entonox and the neonatologist comments "Take your time" adding after a long pause "You all right?" Once the midwife check with the woman that her contraction is over the neonatologist starts again.

Sorry it's very difficult for you this but I appreciate you're listening. As I was saying, I've explained to you that there's a type of medicine that we need to give called surfactant, to help Baby's lungs expand properly and there's two different types that we can use, one's an artificial one and one's a naturally occurring one and we're always trying to find the best possible treatments for babies that come up to the neonatal unit and, at the moment, we're trying to do a study along with a, a number of other units in the country, to see if there's any benefit to giving .. the artificial or the naturally occurring one.. and what I'm here to ask is whether you would be willing to participate in this study. All it involves is making a decision as to whether baby's going to receive the artificial one or the naturally occurring one and, apart from that, there's no other difference to the care that she will get on the neonatal unit. There's no other changes, no other extra tasks or investigations that we need to do. But what we do before she gets there is to randomize and that means, at this stage, I can't tell you which type of surfactant that she will get but that both of them are used widely in this country and we know that both of them work. Okay (Mother: Okay) So, I've got an information sheet for you here about that, consent form. I don't know how you feel about that as well? (to partner) Would you be happy? (partner makes a positive response) Yeah okay. Well I'll give you that in a moment.

This explanation lasts 95 seconds. The remainder of the tape involves discussion of the tape-recording, another contraction lasting 55 seconds, and giving out paperwork. The neonatologist acknowledges the position of the parents after the contraction subsides.

Well done. It's very difficult all of this, lots of things going on at once and I'm very grateful to you taking the time to listen to what I've said. Shall I leave you the information sheets? (Mother: Yeah) and I've got a consent form to be signed as well (Mother: Yeah) which either one of you can do (Mother: Okay) ... There's a lot of bits of paper. I think you're going to struggle to read them in between your contractions but I'll leave them with you (Mother: Yeah) and then I'll pop back down later all right [to collect the forms].

The entire recording lasted 7 minutes and 40 seconds. How long the neonatologist was with the parents, and what information might have been given prior to the start of the recording is not known.

Box 8. Consent during active labour

Box 9 gives details from a tape-recording of an INNOVO Trial discussion in which a lone mother makes a clear decision to enrol her baby in the trial. Cheryl was in an extraordinarily stressful situation. Her unplanned pregnancy was conceived at the end of a violent relationship. When her ex-partner learned of the pregnancy and Cheryl would not be reconciled, he attempted suicide. Days after visiting him in hospital she went into labour at 23 weeks, events which she felt were causally linked. The possibility of enrolling her daughter into the INNOVO Trial was raised when she was five days old and making no progress. Cheryl was already aware of the gravity of her condition, but it is clear that immediately the neonatologist emphasised the severity of the situation, she indicated that she would accept the trial.

Consent on a NICU

Cheryl was alone when she discussed the INNOVO Trial. The neonatologist described INO as "a newish concept", explaining how it works and the possibility of side effects.

> *What it is good at doing is opening up the blood vessels that go into the lungs. There's a natural tendency after birth for the lungs to be constricted, particularly if they are unhealthy in any way, and giving this gas we think might be helpful, you know, in opening them up. If it was all straightforward of course we would just go on and use it (Cheryl. laughs) but it is not entirely straightforward because it does potentially have side effects. Certainly we think it can inflame the lungs. Alright you might get a positive effect to begin with but then later on it might cause an inflammation. (Cheryl. inaudible). It might also cause some problems with bleeding and it's also the sort of thing that's in cigarette smoke naturally, so that we are worried that in the longer long term that there might be some sort of risk with regard to cancer. Now of course if we thought that those risks were very high (Cheryl. Yeah) we wouldn't think about using it. So as it is we have a potential good effect, there's some concern about side effects but not enough to make us feel that we shouldn't use it (Cheryl. Uhuh) and we want to know whether it is the right thing to do for babies [with] this sort of degree of problem (Mother. Yeah)*

Randomisation was briefly described before the following description of the rationale for the INNOVO Trial and the terms under which INO could be given.

> *The reason why we are doing it is to try and find out scientifically what the balances of advantages and disadvantages are, you know. I don't have any concerns about giving it but equally if you decide you don't want to do the trial that is actually fine and we wouldn't give it under those circumstances. We would just carry on what (Cheryl. carry on) we are doing, you know and I don't have any problem with that. But if we are going to use it I would rather do it now when she is stable enough for us to introduce it and make a decision about yeah it does seem helpful or no it doesn't. (Cheryl. Yeah) and I'd rather you didn't decide just for a minute. I'd rather you sort of think about it at least for a half an hour or so. Mull it over and perhaps talk to the dad, and then if you are happy I can actually make this randomisation process go ahead very quickly.*

More details of randomisation were given and then the neonatologist turned to Rosie's condition.

> *You know that she is very sick and that we are running out of options generally (Cheryl. Yeah), irrespective of this trial, so you know I think we just have to take it step by step. If things do get worse then she won't survive, that's - (Cheryl.Yeah) you're aware of that. She has had this small bleed into her head (Cheryl.- inaudible). That doesn't surprise me given that she's so tiny and it's sort of middle sized if you like but it's not disastrous. If I felt she had had a huge bleed into her head and therefore a brain that had been really seriously damaged, I would tell you now. (Cheryl. Uhuh) I would say we should stop (Cheryl. Yeah) but that's not the case ... (Cheryl. Right) It is not hopeless yet, but I think if it gets hopeless then we will say we'd tell you.*

At this point Cheryl interrupted, stating "*I know I am going to go ahead with it.*" The neonatologist reiterated that she should take some time.

> *Right, well look I'll give you half an hour anyway and then I will come back to you and say well look if you are happy that's fine and I'll make the call, but I'll just give you a few minutes to think it through*

The conversation lasted under five minutes. Cheryl explained in interview that she did not wait but searched for the neonatologist to reiterate her wish to enrol Rosie in the trial. She said: "I just felt that I was going to do something ..., you know, anything to try and help her. That's how I felt, anything, even if it didn't help, at least I know I've tried."

Box 9. Consent on the neonatal unit. Cheryl (Int.74 INNOVO)

Speed of decision-making

In considering the speed at which decisions were made it is important to assess how much time parents felt was actually available, and how much time they then chose to take. The sample is divided into those who did and did not make rapid decisions, in order to explore how the two groups described their choices.

How much time was available?

The parents usually described at some length their conversations about the (potential) condition of their baby and the possibility of enrolment in a trial. Exactly how much time they were actually given to decide on participation was not always clear, but in most cases[49] it was possible to categorise the time frames as long, short or minimal.

For the long timeframes (N=3) a day or more was available to make a decision. This was possible as there was only a threat of delivery, because a baby had stabilised but could still deteriorate, or was gradually deteriorating towards becoming trial-eligible.

In a further 33 cases, parents were informed about a trial and required to give their decision in less than 24 hours (the time-scale defined by Manning (2000) as emergency consent). Within this timeframe parents in 11 instances were given some time to think through their choice, albeit often only a matter of five or ten minutes, defined here as a short timeframe (N=9 INNOVO, N=2 CANDA). In the remaining 22 instances parents were required to decide in the context of one conversation about the trial, defined as a minimal timeframe (N=10 INNOVO, N=12 CANDA). This distinction, although often short in terms of time is important, as in the minimal timeframe there was no opportunity for private deliberation.

In summary, for 14 of the 40 decisions (35%) parents were offered some time to make their choice, (long or a short timeframe), in 22 they were asked to make a decision in a minimal timeframe (55%), and in 4 (10%) the timeframe is unclear.

[49] The timescale for one case is missing as the mother, Joyce, had no recollection of the CANDA Trial, and was unaware at interview that her baby was enrolled in the trial. In another three cases the parental account of the time available for their decision was insufficiently clear to categorise.

How much time was taken?

Regardless of the available timeframe, in 29 of the 40 decisions (73%), parents said that they made their choice immediately, with 26 being to accept trial participation. These instantaneous decisions will be referred to as 'rapid decisions'. There were 6 cases within the 29 rapid decisions, where parents were offered more time but still made their choice straight away. Where neonatologists were aware that parents had made a rapid decision, parents explained that they were sometimes advised to take a further few minutes to reflect, as was Cheryl, but it is clear in the interviews that the parents were already convinced.

Clearly there is a relationship between the time the parents felt was available to them and the time that they took to make their decisions. In the 22 cases where they felt they were offered a minimal timeframe, all parents made an immediate decision. In the 14 cases where more time was available only 3 decisions were made immediately. There are no differences in between the two trials in terms of the immediacy of the decisions that were made, with an even split in the immediate decisions (14 CANDA, 15 INNOVO) and in the non-immediate decisions (5 CANDA, 6 INNOVO). Table 10 gives further details of time available and time taken.

Time offered	**Time taken**				**Total**
	Decided immediately		**Did not decide immediately**		
	CANDA	INNOVO	CANDA	INNOVO	
Long - accepted	1	-	1	1	3
- refused	-	-	-	-	-
Short - accepted	1	4	1	5	11
- declined	-	-	-	-	-
Minimal - accepted	9	10	-	-	19
- declined	3	-	-	-	3
Unclear - accepted	-	1	2	-	3
- declined	-	-	1	-	1
	14	15	5	6	
	29		**11**		**40**

Table 10. Time available for decision-making and time taken

Part II – Parents' stated reasons for the pace of their decision

The data were analysed to account for the pace of parental decisions, over and above simply being given more or less time by the staff involved.

Reasons for a rapid decision

Where parents made rapid decisions (N=29[50]), they often made such comments as "there was no hesitation at all," it was "a snap decision", "an instant decision", and "we told them straightaway." The factors associated with rapid decisions can be grouped into four broad areas:

- A background of concern for their baby
- Reactions to staff
- The level of significance attached to the trial
- Importance attached to contributing to research

In describing these factors, frequencies are not given as parents described a complicated mix of inter-related forces driving their decisions. Emotions such as trust and hope, alienation and fear, could overlap to such an extent that it would be inappropriate to view them as independent aspects in the decision-making process. The factors presented here should be seen as elements within attitudes and experiences which combine to bring parents to the point of choosing to accept or decline participation in a trial. They cannot be divorced from both the wider and the more specific details of the parental circumstances. For this reason the parental accounts of their choices are placed firmly in the context of individual experiences leading up to the time of decision-making, with attention to the possible influence of finer details, such as a change in the condition of a baby, the timing of the offer of a trial, a comment from a neonatologist, or a specific interpretation of events.

[50] As a reminder, the figure refers to 29 decisions, not the number of interviews or the number of parents. It includes the four decisions to decline the trial.

A background of concern for the baby

Concern for the baby was uppermost in the minds of all parents and very commonly was an important factor driving the choice about trial participation. The rapid decisions that were made were often grounded in their fear of what might happen, and/or the hope that they felt was offered by trial enrolment. These two emotions dominate the qualitative data which are presented in this chapter[51].

Fear

Fear was undoubtedly the dominant emotion. Every parent indicated that they had felt fearful and anxious at some point. They described themselves as terrified (Ints. 41, 49, 51,70, 81) scared (45, 53, 55, 56, 61, 65, 72, 74) petrified (55, 61, 74), frightened (41, 48, 62, 69, 71, 73, 81 and panicking (42, 73). The fear that they described was not uniform. Parents could fear the unknown, with delivery imminent, or in the case of those with previous similar experiences, they could be undergoing events which were awfully familiar. Their fear could derive from a good or a poor level of insight into the implications of their baby's (likely) condition. If their baby was receiving intensive care they could be shocked and frightened by the reality. They could feel anxious about the choice that they had to make, about the trial interventions, or could fear the possibility that they would not access the "right" intervention. Most commonly and powerfully parents were afraid that their baby would die. They described a sense of desperation, an overwhelming dread that this might happen. One mother's comments are typical. She said: "I'd have tried anything to keep her alive, I wanted her to live so much" (Lorraine Int.78 INNOVO).

Fear did not drive all parents in the same direction. Whilst it pushed many to make very quick decisions to join a trial, it also led a minority to decline. Some felt anxious and burdened by the decisions, taking as much time as they dared in the circumstances. Some decided to decline the trial from fear; in the case of Shelley and Evan (Int.47 CANDA) it was an almost instinctive reaction to their sense of overwhelming fear and shock at the realisation of their situation. Evan explained

[51] The pervasiveness of fear and hope mean that it would be highly repetitious to fully represent these as independent factors. Instead they are summarised in terms of their role as both the background or context, and as the immediate impetus for the choices that the parents made.

with an evocative phrase that when they heard about the trial "the first thing we thought was "No, no way!" (Evan Int.47 CANDA)

The different types and degrees of fear that they experienced underscore almost all of the elements of decision-making. The majority of the statements made by the parents cannot actually be divorced from parental fear.

Hope

Fear and hope were generally the two emotional sides of the parental situation; there is an obvious link between despair and the desire for a solution. They were often closely intertwined in the explanations that parents gave for their rapid decisions. For instance:

> I'd had him baptised. I didn't want to lose him ... and he was really poorly. There's nothing else they can do for him so yes we participated. ... [The neonatologist] said ... there's nothing else they could do, there's no worse anything'll get, give it a go because it might just make him better. So I just clung on to that. I signed straight away, definitely, you know. Like I wanted what was best and took his advice. (Joyce Int.41/69 INNOVO)

Both trials could seem to offer the potential to improve the situation, to offer "a chance" and "a glimmer of hope". This made the trials desirable options, almost regardless of what they involved. The vast majority of the parents felt that they offered an important treatment option, ranging from something that might improve the situation to possibly saving their baby's life.

For both trials parents commonly felt that the neonatologists were clear about the benefits of the interventions, describing them as saying, for instance, "it would help" and "how safe it was to use, and how they were hoping that it would really do the trick." Some parents argued in a common sense way that a trial was likely to offer some benefit:

> They wouldn't be doing it if it didn't help him at all. I mean I know it was a trial to see how effective it would be, but there's got to be some kind of benefit or, or they wouldn't be doing it in the first place. (Simon Int.58 CANDA)

In the INNOVO Trial, in almost every interview, parents agreed to the trial

specifically to try to access nitric oxide in the hope that it would help their baby. As for the parents in the ECMO Studies, the experimental arm of the trial was perceived as far more desirable than the control arm, which was seen as effectively doing nothing.

Reactions to staff

How the parents reacted to the staff who offered the trials appeared to be an important factor in their decisions. Most accounts indicated that parents could make their choice very quickly as they trusted the individual involved, or that they were irritated or alienated by staff who disturbed or upset them. At a time of extreme emotions there seemed to be little middle ground.

Trust

A strong theme in the interviews was the level of trust that the parents placed in the staff who presented a trial to them. In some cases the neonatologists inspired parents with confidence. Parents described having "a lot of confidence" in the neonatologist (Int.66), how "you put yourselves in [their] hands" (Int.64) and how "you just trust them" (Int.42). Where parents exhibited trust in making their rapid decisions, it could be due to the inferred or the explicitly stated approval of the staff. By simply offering a trial it seemed that the staff, who were better informed than themselves, essentially supported their consent to participation.

For the parents involved in the CANDA Trial there was no pre-existing relationship with the neonatal staff and so a degree of confidence had to be gained quickly in difficult circumstances. The neonatologists often explained in their interviews that a common way to approach parents for this trial was to embed details of the research into a conversation about the implications of preterm birth and how their baby would be managed after delivery. The neonatologists felt that this was kinder, promoted a better relationship with parents, and might make consent more likely than simply introducing themselves and then immediately making the offer of trial participation. It certainly worked in some cases where parents described the neonatologists who had approached them as "very comforting", and "really lovely, really put me at ease". It

could, however, be a very difficult point as the realities and consequences of their situation are made clear. For Mona whose baby was delivered after she developed pre-eclampsia, the trust that she felt was important to her, but it was generic and not particularly located within the encounter with the doctor who approached her about taking part in the CANDA Trial. She said that she had no concerns about agreeing to the trial straight away.

> I trusted the people that were there ... and I didn't think for one second that they would ... try and do anything that would harm her or hinder her, so it wasn't a big issue. (Mona Int.53)

A similar comment was made by a father. Matt and his partner Gina had previously experienced the loss of their first baby after a placental abruption less than a year earlier and found themselves facing the delivery of a second preterm baby for the same reason. The second baby would be admitted to the NICU where their first baby died. Gina and Matt described the staff involved in their care, with whom they were already familiar, as "absolutely tremendous people" and this very positive view shaped how they reacted to the offer of the CANDA Trial. They were approached by a "dead sheepish" doctor during labour. Gina said that she was not able to listen to him as she was focusing exclusively on the fetal monitor. They actively chose not to read the information leaflet or to take any time to discuss their options and simply agreed to take part in the trial. Matt commented:

> They give you a thing which tells you everything you need to know ... but there's no way on God's earth you're going ... to sit and read it. ... I didn't really understand .. about the research to tell you the honest truth. And that wasn't because of the way it was said. It was explained to us. I was given things to read, but ... I don't personally see a way that you can sit me down and make me understand what you want to tell us in that situation?

For Matt there were two issues; firstly he trusted the doctors to do what was right and to protect their baby in a research context, and secondly he felt that they had a personal stake in research. Matt placed a high degree of trust in staff and the system.

> I don't think hospitals are out to hurt you, and ... I know you hear of all these mistakes, but I don't think they're going purposely do something that they think can harm babies. (Matt Int.56)

Some of the women described being approached in quite difficult stages of labour to discuss the CANDA Trial. It was in fact remarkable how trusting and tolerant they

were in this situation. It may be the case that in a situation where they feel unable to give full consideration to the information that is available, trust is their main option.

Freda, for instance, went into early labour with twins (29 weeks). The labour could not be stopped and the twins were delivered by caesarean section with an epidural. She was initially approached to discuss the CANDA Trial after the decision to carry out a caesarean section had been made and before her husband arrived at the hospital. She was asked how she was during this conversation. She was in the operating theatre "bent over a cushion with a needle in my back." She felt positive about the neonatologist who discussed the trial but felt that she was given insufficient information.

> She was quite comforting, but I felt as though they hadn't told us a lot about it, I think I couldn't really sort of, make a decision on the facts what [I] had, so I just said "Whatever is best for them", you know.

Freda characterised the approach as almost a comment in passing – "Oh, by the way would you take part in our trial?"

> So I said "What is it?" and they said "It's mainly just one gets one surfactant and one gets the other, would you do it?" and I says "Well, just whatever's best for them really, that's all I'm bothered about". So off she went, come back with the papers, by then I was like on the table practically getting cut open, she went "Will you sign this?" but I couldn't actually sign because by this time I was actually lying down with drips in my hands and things. (Freda Int.50)

For the INNOVO Trial some parents were approached by a neonatologist who was unfamiliar to them, but often there was a relationship with staff prior to the offer of a trial. Where a neonatologist had been caring for their baby, and then offered the trial, the parents generally trusted that he or she felt that it would be the right thing to do. This was the case for Rebecca and Roger. Rebecca went into a rapidly moving premature labour (28 weeks) which could not be stopped. She explained how their relationship with staff developed over the time that their son was in the NICU.

> As time went on and they knew us a bit better, they understood that Roger and I could basically take anything, and we wanted to be told everything, so we were treated that way. So it was very good.

The INNOVO Trial was discussed when their son was a few weeks old[52] and not making progress. A consultant had been called back to the NICU in the evening to see their baby. The description that Rebecca gave of the discussion about the trial that night was wholly positive.

> I think [she] dealt with it very sensitively. She was trying not to alarm us, I think, because of the complications that had occurred that day ... Her main concern was that he wasn't improving. ... I felt very comfortable about the whole situation. I felt it was explained very well, and any questions we had, she answered.

There is a sense in this interview of all parties being in concordance, with the approach of the consultant suiting the personal needs and wants of the parents.

> It was managed very well. We were not taken away ... it was easier to do it by his bedside... The consultant was great. She was very, very good ... She got us both together and she first of all explained what Raymond's condition was like, the complications and why she was called back in . ... They weren't life threatening, but ... he should have been improving probably a bit more than he was at the time. ... So she then said that there was a trial going on, stressed that it was a trial and ... what the treatment did and then we could make a conscious decision whether we felt that we were happy about the trial going ahead. So she went through what the treatment was ... and stressed also that the treatment may not work; there was no guarantees that the treatment would work ... But that it would not make things worse, there was no way it could make things worse because it was being used alongside the treatment that he was already having. ... I have to say ... I wanted a guarantee that it wouldn't make things worse, because at the end of the day if there's a possibility that it could be worse, then your decision is different. But the main reason we didn't particularly hesitate with going forward was because it couldn't make it worse ... and there was a chance that it could help and make things better. ... And also the fact that the other treatment he was on at the time, the ventilation, wouldn't stop, it wasn't replacing treatment, it was aiding [it]. ... So we were actually very pleased about that because any sort of glimmer of something possibly working was great.

Rebecca felt that although they had to think through the issues involved in the trial, trust in their consultant helped them to make their rapid decision.

> You do get into a situation where you completely trust the doctor. ... You have to trust them, you know. You don't know anything about what his treatment should be or what's the best course of treatment. And [she] actually said that she believed that Raymond's current situation made him an ideal candidate for the trial.... She believed that the treatment would be the right thing if it worked for him. But she did stress that there was a big chance that it might do nothing. (Rebecca Int.68)

---

[52] The timing is unclear in the interview but to be trial-eligible he must have been under four weeks old.

Similarly Joyce, who said she "signed straight away", said that her trust in her doctor was highly influential in her rapid decision. For her however the situation was very different. She was highly stressed and fearful and was desperate for a solution. When her doctor suggested the INNOVO Trial she agreed immediately.

> I had a lot of confidence in him you know what I mean. Them doctors know what they are doing, they definitely definitely do! And you put your trust in [them], you just trust them. You've got to haven't you, and I did.

Her reaction on learning that her baby would be in the control arm of the trial and would not receive INO is indicative of the stress that she was experiencing at the time, and reveals the degree of faith she had placed in the neonatologist (emphasis added).

> [He] come back and he just shook his head and he went "I'm sorry" ... and oh I just screamed, I just broke down again, *I really thought he was going to get us in on that* and really thought it would help but I just broke down. (Joyce Int.41/69 INNOVO)

Irritation

Some of the rapid decisions were made as parents felt a degree of irritation with the staff involved. Where women were themselves ill or in labour it was clear that, for understandable reasons, the approach was not always given close attention. Whilst some women were understanding, and some were quite neutral, the information, the interaction or the concentration that was required could, for some, exacerbate stress to an unacceptable level. In such cases there was a sense that having someone come to discuss a trial could be annoying, too much to cope with or it could even seem to be irrelevant.

Lorraine found it hard to appreciate that her baby would arrive within a matter of hours, and when she was approached during labour felt that she did not yet need or want to consider what would happen when her baby was born, commenting: "I didn't want to know! I didn't want to know!" Some parents who were approached when the women were at various stages of labour had wanted the staff to leave, and signing the form could be a means to achieve that. Fiona, whose early labour could not be halted, was transferred to another hospital.

> I just wanted to get [the caesarean section] over to tell you the truth. Just for it to be over with [and I said] "Just say to them "Look, I'll sign it, and you just get on with it!".

Fiona was in an extraordinarily difficult situation. In a 13 month period she and her partner Geoff had experienced a stillbirth at 26 weeks of pregnancy after a placental abruption, a miscarriage, and then this second abruption at 27 weeks for the baby who was enrolled in the CANDA Trial.

> Through the night I woke up and ...I thought "God", and I pulled the blankets back. I was just covered in blood.

Fiona was sleeping in the same room as her small daughter who was "petrified". She was taken to hospital by ambulance where her bleeding stopped temporarily. A scan showed that counter to her expectations the baby was alive. She went into labour and underwent an emergency caesarean section later the same day. She was approached about the CANDA Trial at what felt to her to be a particularly frantic time.

> Fiona: It was a quick conversation. I know because they were all coming in the room - I was still bleeding at this point - and they were saying "she needs a caesarean, we've got to get her ready" and they made the tests, and everybody was coming in, and there was just loads of people around.
>
> CS: So how were you feeling then?
>
> Fiona: I was just dying to get it done - I was in agony.
>
> Geoff: There was about ten doctors in the room at the time, wasn't there? [They were] putting in catheters, they were putting in more for the caesarean and things like that? [We] didn't have time to think.

Fiona was asked what she remembered of what she was told. She knew that a comparison was being made and felt that it was between "an animal steroid and a human steroid." She found it difficult to explain the nature of the research.

> One didn't work better than the other, but they were trying this one out because maybes it could work, better than the other one. But it wouldn't work as much as - I cannot remember, really ... I just wanted to get it over to tell you the truth. Just for it to be over with and I thought, well, I didn't really think anything about that.

She could not concentrate fully on the discussion about the trial and signing the form was a means to end to the conversation so that the much-wanted operation could proceed[53].

> I knew what he was saying but I just wasn't really taking it in, just thinking "Give us the form, I'll sign it, just get on with it and get [the caesarean] over with." (Fiona Int.43) [54]

A similar view was expressed by Eve who had developed pre-eclampsia but had not sought medical care. When she consulted her doctor, was sent to hospital and was then transferred as an emergency to another hospital for delivery as her condition rapidly deteriorated (28 weeks). She was approached about the CANDA Trial as she was waiting for an emergency caesarean section to be carried out. She consented quickly and commented:

> I was just sick of seeing people that I didn't know, I just didn't want anything more to do with them. ... I was just tired and sick. (Eve Int.54)

Some parents expressed concern in their interview that they were unable to give their decision suitable consideration given their circumstances. In the case of Maureen, as for Fiona described above, her partner was not present when she was asked to consider a trial during labour (26 weeks). A different neonatologist arrived at a very late stage for her decision. Although at the time of the delivery she had been less concerned about this, accepting the irritation of the trial because she was "so happy", in looking back over how the situation was handled her views became stronger.

> Maureen: I thought it was appalling.
>
> Charles: There [she] was in a state of shock and a state of discomfort, trying to deliver the placenta, uncertain about the fate of the baby, ... sat there [making] a snap decision on whether to do this or not, having not had a consultation period.
>
> Maureen: Afterwards I felt as if I wasn't given enough information and I was more or less given the form. "Can you sign that so she can have her surfactants?" and I said "Yes" you know "Go". And I didn't make a decision really. ...[At] the end of the day you just want to get rid of this bloke and carry

---

[53] It is not clear that the conversation about the CANDA Trial would in fact have delayed the operation. It may be that Fiona simply felt that she needed the conversation to end so that she could focus on the event to come.

[54] During the interview Fiona was understanding about the need to approach women in such circumstances, commenting "I think the way they managed it was right" but she did add that it would have been easier had she been approached earlier when her bleeding had settled.

on with what you're doing. I think I was in a situation where I couldn't not have signed it, I couldn't have sat there and said "Well, let me just query this bit again". (Maureen & Charles Int.46)

Alienation

There were two cases where parents decisions to turn down the CANDA Trial were bound up with their sense of alienation from the neonatologist who approached them. As they chose not to participate their stories are described in more detail in the following chapter. One mother, Janine still felt angry by the time of the interview but Shelley and Evan who felt very negative at the time of the discussion, came to feel that the doctor in question was "very good in the field" and "we had no problems with him", but the key factor was "just his way of explaining it."

The significance of the trial

The settings for the two trials were quite different. For the CANDA Trial the babies were not delivered at the time of consent. Precisely how the baby would be affected was unclear although the lower the gestation the more compromised the baby was likely to be. Antenatal steroids were administered to help to mature the lungs whenever possible. This and the use of surfactant on delivery were standard clinical responses to this situation. The range of other existing treatments and support systems which might be drawn upon once the baby was delivered were all still available as potentially helpful options.

In comparison, the babies that were eligible for the INNOVO Trial were already compromised. In many cases the various treatment options had been tried and were ineffective or no longer sufficient to support the baby. Often the parents were aware that there were few available avenues left to explore.

The speed of the parental decisions was sometimes directly related to how they saw their situation in terms of the available options and the significance that they attached to the trials.

The CANDA Trial

The CANDA Trial did not add to their options

The parents commonly felt that the neonatologists presented the CANDA Trial as a benign and safe research study which may help their babies but was unlikely to cause any harm. Some felt that that if it affected outcome it would probably be in a small way. Parents often were aware that the trial aimed to assess the relative values of the two forms of surfactant. Others knew very little about the research but had picked up the sense from the neonatologist that the trial was not "that big an issue".

Maureen described confidence in the use of surfactant and did not have a preference for ALEC or Curosurf. A feeling that it was not a crucial decision for their baby meant that it could be an easy and therefore a quick decision to make.

> I know that ALEC is the one that they've used a long time ... so it's proven to be alright. So I knew that if she had that ALEC one [it] would be alright and that the Curosurf one would be, I thought, equally as good. They wouldn't be trialing it unless they were quite confident that it would work. (Maureen Int.46)

Cathy was not able to describe the surfactants but she did give the essential features of the trial in her account.

> The gentleman from special care came in to ask if we would take part in the ... study. [He] said it was between natural and I presume man-made ... products. [He] did emphasise that they would be using one anyway and that there appeared to be [no] difference between the two but they were doing this trial. ... I was happy with that. (Cathy Int.57)

In another two cases parents indicated that they did not have particularly high expectations that the trial would affect their situation. Mona explained:

> He said that they were trying to establish which one was the more effective on the lungs. ... He didn't tell me what the drugs were, he didn't tell me exactly what they did, he just said they either built up or strengthened the lungs or something like that, and they were trying to find out which was the most effective, because there was a new one that had come out and they were trying to see whether it was better than the one they were already using. I said yeah no problem, because I was under the impression that they both did the same thing anyway. It wasn't really an issue. I mean if he'd have turned round and said one's brand new and it's never been used

before ... I'd have probably been a little bit more apprehensive, but then saying that no I don't think I would, because I knew that literally Mandy was 1lb 6 but it doesn't very often happen that babies that small survive. (Mona Int.53)

Balfour (Int.54) gave two slightly different accounts in his interview, at one point saying that the neonatologist who discussed the trial with them indicated that it was unlikely to benefit their baby – "He was saying ... no better chances, [that it was] just to experiment more or less". He did not feel that it was a big decision or a responsibility to enrol their baby in the trial, and he commented "I wasn't really bothered at the time ... I just said "Aye, owt[55]." Balfour later added. "I don't think I thought it was that big a deal to tell you the truth", a statement which Eve agreed with. He did however indicate several times in the interview that they were under the impression that participation in the CANDA Trial would "improve his chances". Eve commented that she was happy for him to be enrolled as they were told that "it wouldn't make anything worse."

The CANDA Trial might improve the baby's condition

As suggested earlier, hope, along with fear, was a dominant emotion which ran throughout parental accounts of their discussions and decisions about trial participation. This emotion is clearly prevalent in many responses to the CANDA Trial. Most of those who agreed to enrol their baby did so in the hope that it would be beneficial. The possible benefits were often rather vague and undefined with parents frequently commenting that they simply wanted to help their baby; they wanted "whatever's best".

Teresa and Simon's son was born when Teresa went into early labour (28 weeks). This extended extract of their accounts of their conversation with the neonatologist is very similar to those given in several interviews, showing a process of weighing up what they felt the trial had to offer them. They concluded that it could only be to the benefit of their baby to take part.

Teresa: He came and spoke to me about it and asked if we'd both be, be willing to go ahead with it and he explained about the – surfacant isn't it? [*sic*] Surfactant! -

[55] Dialect – "yes, anything"

what it actually does, how it opens the lungs up and you know if they needed it and they were doing a trial to test. There was like, one made, was it from pigs or something? ... And then there was an artificial one that they normally use, but I remember him saying the pigs one was more expensive than all the rest of it and that's why they were trialling it to make sure that it was more effective or something and we were quite happy.

Simon: They said that the success rate was good at the time or something ... and we just said well we've really got nothing to lose, and that was just fine. We told them straightaway. ... We were just sort of anything! Anything to help at the time, because we were quite concerned about his sort of state and like his actual health and we just thought, anything that's going to sort of help him on his way is a bonus really.

CS: Did you feel both of them would help him, is that what you mean?

Teresa: Well yeah.

Simon: Well yeah I mean they wouldn't be doing it if it didn't help him at all. I mean I know it was a trial to see how effective it would be, but there's got to be some kind of benefit or they wouldn't be doing it in the first place really.

Teresa: Yeah. I'd say when it's got to the point of it being at a trial stage, you know I didn't think it would do him any harm.

Simon: We said is there going to be side-effects and he sort of said no.

Teresa: He said well he needs it regardless so it was either this one or that one and he's got to have it, you know he couldn't survive without it, so we said well yeah, that's fine. (Teresa & Simon Int.58)

Another mother, Zoë, whose baby was also born after an early labour (27 weeks) made an interesting comment which indicated that she saw the trial as potentially offering an additional treatment option, Curosurf. She did not however feel that it was such an important option that she worried that they may ultimately be denied access to it:

Some consultants thought one was best, some thought the other was best, there was no consensus and they wanted to decide which was the best one to use. And she told us if we decided not to go for the trial that we would get the synthetic one, the ALEC. We ... had a sort of gut feeling that we preferred the Curosurf one anyway, because it was thought that it acted quicker because it was a natural based protein ... and so we just sort of inclined towards the natural rather than the synthetic anyway and thought if it works quicker, great. Therefore if we go for the [trial] she might be given that. If she isn't she's only given what the hospital would have given her anyway. So we felt it was a kind of win-win solution for us. (Zoë Int.44)

The CANDA Trial might save their baby's life

Although parents often hoped for some benefit through participation in the CANDA Trial, it was rare that it was seen as a life or death issue. One exception was Jill who was approached to discuss the trial when she was an inpatient in the days preceding a caesarean section. Her baby was conceived by IVF. She started to bleed and leak amniotic fluid at 26 weeks of pregnancy and was hospitalised. She could have had time to make a slower decision but she did not appear to have been given this opportunity. She chose not to discuss the trial with her husband as she "did not want to bog him down with anything else". She describes her decision as if it was in one conversation with the neonatologist, whom she described in very positive terms.

> She was very gentle in her manner. She introduced herself, asked could she sit down and have a chat to me and she explained about about the baby's lungs, the conditions sometimes that the baby's lungs are in when they're born prematurely. She told me about this surfactant and where it came from, and was it pigs or something? Pigs' blood or something which I was sort of quite disturbed about that at first, you know, a bit concerned but she sort of explained to me what they'd done, how safe it was to use, and how they were hoping that it would really do the trick with the lungs, with them being sort of, is it full of holes and things? ... So I felt quite comfortable with signing up for it because she explained in depth and in easy terms as opposed to baffling you with science, you know what I mean, like they can sometimes, so I felt quite comfortable with doing that.

The crux of the decision that Jill made was that she though that participation in the CANDA Trial could make a crucial difference for their baby.

> I thought if it's going to help her survive, I'll do anything, you know what I mean, I would have done anything. (Jill Int.51)

The INNOVO Trial

The setting of the INNOVO Trial meant that the parents of eligible babies were inevitably stressed and anxious, hoping for something that would turn their situation around. It might be expected that where babies are in such a vulnerable condition, there might be variety amongst parents as to whether or not they felt able to join a trial and expose their baby to an unevaluated intervention. This was in fact rarely the case. The parents did vary in the significance they attached to the trial, ranging from those

who hoped for a benefit but were prepared for the fact that it may not prove to be a solution, to those who felt it offered a significant, if not the only, chance of survival for their baby. The latter view was by far the most common, and in all but two cases (65, 81) the parents enrolled with a most definite hope that their baby would be allocated to receive INO.

The INNOVO Trial might improve the baby's condition

There were some parents who did not see INO as a definite solution to their problems. David and Julia for instance felt able to make a rapid decision because they felt that the trial was at least worth a try. Their baby was delivered by emergency caesarean section after a placental abruption (27 weeks). She was very ill and David was called to the hospital late at night. He had to find a baby-sitter at 11pm and drive an hour to the hospital. He was aware of the seriousness of the situation.

> There was a real decision to be made because basically although they didn't think there were any bad effects of this treatment, there were a few that they had to bring to our attention, so there was a small chance we could actually decide something that would actually make the situation worse.

They decided to join the trial. Julia commented: "It seemed the only sensible decision in the circumstances. ... They didn't think she was going to live so I mean we were willing to try anything." David made much the same comment: "So anything that gave her a chance, we were going to worry about the side effects later on." He expanded on this, saying that they very much wanted their daughter to be allocated to INO. They did not feel that they were exposing her to too great a risk: "it wasn't a finely balanced thing."

> If it had gone horribly, if she'd died, basically, it would have still been worthwhile doing because I don't think it would have been this trial that had killed her it just wouldn't have succeeded in saving her life. (David Int.66)

Heather and Jeremy were also aware of the limitations in the offer of the INNOVO Trial. Their baby was delivered by emergency caesarean section when Heather's early and fast labour could not be stopped (26 weeks). He was very sick. They brought their older small son to the hospital to meet his new brother on the encouragement of the staff. He was baptised, and then moved to a NICU at another

hospital. Heather could not be transferred at the same time. She described herself as "emotionally shut down". Jeremy was approached by a neonatologist on his arrival at the second hospital and asked if they could "go off and have a chat." He found this unnerving. It made him panic as it was "the stereotypical way of breaking bad news". It was in fact to discuss the INNOVO Trial. Jeremy explained how he saw the trial.

> The gist of it as I remember was that the trial is an alternative to the normal way of giving oxygen in an incubator and that this was a new bit of research that they didn't know a great deal about it. They were still trying to find out if it was better than what they were doing at present, and that it was just an alternative. It was no guarantee better. ... I remember asking if there were any side effects and she said at that stage, as far as they could tell, no. But things were at a very early, early stage and ... I suppose fairly limited. [It] sounds as though we weren't given enough information but no, because things were so new and obviously you just want anything that, that could possibly help.

Jeremy did not decide instantly because he wanted to call Heather to discuss what they should do. Once they spoke, they decided straight away. Jeremy described the trial as offering a "possibility to get Aidan through." He explained further

> It was a fairly quick decision to go ahead with it. There didn't seem any harm in it. If there was, if there was an obvious side effect, a bad side effect then, you know, we just wouldn't have done it. ... But no, it was always made clear it was a trial, it was not a magic cure ... and I was well aware that he may well fall into either group, but I think like I say the problem is you're trying to grasp at things that *are* a magic cure. (Jeremy Int.77)

Their baby was allocated to the control arm of the trial and probably because they were not pinning all of their hopes on INO, they said that this was swiftly forgotten. Shortly afterwards their baby died.

<u>The INNOVO Trial was important as they were running out of other options</u>

For some parents the INNOVO Trial was offered in the context of a dwindling number of options. In some cases they were told that ECMO was still an option but this could be frightening in itself. Parents were often aware that ECMO was reserved for the most serious cases and the possibility of allocation to INO could help to avoid having to resort to such an extreme option. In this setting parents could feel helpless and compelled to consent. Sheila and Len, whose daughter aspirated meconium during a term delivery, described precisely this feeling.

> I don't feel like we made a decision. There wasn't any decision to be made. You just asked the consultant ... and he explained what it could do, and what it would save her from going through you just say, "Yeah", straightaway, you know. You don't think about it, you'll chop your arms off if it'll give her a chance (Sheila Int.71)

A father, Michael, described a rapid and focused weighing-up of options for his son. Michael and Trisha had terminated two pregnancies for spina bifida, at 19 and at 24 weeks of pregnancy and their son was born six weeks early with a streptococcal infection. It was extraordinarily difficult for Michael to feel that his son may die. He described several times how he was barely able to contain his emotions in the NICU. Like Jeremy he followed his baby to a second hospital and was asked to consider the INNOVO Trial on his own. He was very protective of his partner, shielding her from information throughout their experience, and chose not to involve her in the decision about the trial. He described the consultant caring for the baby as saying "We have got to discuss what we are going to do because he is getting weaker and nothing is working". He did not feel that he understood the trial but still felt that giving his consent was the obvious thing to do. In part his decision hinged around his concerns about the potential difficulties involved in transfer for ECMO.

> I didn't have any choice. ... The three options I had was: carry on as we are, go for the trial and hope that it improves him, or risk transferring him [to another hospital], which he might not make, for ECMO. (Michael Int.61)

He described himself "sat cross-fingered and cross-legged" hoping for allocation to INO "because at that time it was the only hope that we had."

There were no new options other than the INNOVO Trial

For many of parents there was a strong sense that the INNOVO Trial had been discussed when they were vulnerable and sometimes when they had nowhere else to turn. In half of the interviews related to the INNOVO Trial, parents stated that they were told that there were no remaining treatment options left. This appeared to result in two responses. Some clearly felt overwhelmed and described how they had simply gone along with the suggestion of the trial and others reacted in a more active and decisive manner. Whatever the style of the decisions, it was precisely because they felt that their options were so limited that they instantly agreed to take part.

One mother, Nicky, whose term baby was born with a streptococcal infection, said that the trial represented hope in a difficult situation and they "grabbed it". They had already been told that their daughter may not survive. She explained how they were feeling when the trial was offered.

> Initially when [the consultant] told us how sick she was and what was happening it was 50:50, you know there wasn't much hope. And then they pull the trial out and say you know this could make her better. It's possible that this could make her better and we were like – Yeah! Do it! He didn't push us, but in the situation we were in it was hope and we grabbed it. I mean if he had said there was 10% chance that this would work we would have took the 10%. (Nicky Int.62)

At another point in the interview Nicky's comments suggest that she felt that the staff involved were also searching for a solution.

> I think they sort of said well –not like it was your only hope but you know that there wasn't much else that they could do for her basically and this was about the only other thing that they could think of that might help her. (Nicky Int.62)

In the case of Esther and Mark's son, one of twins, there was a clear sense of the process of using up the available treatment options. Esther had had a difficult twin pregnancy with much concern that one baby was not thriving. Her hind waters broke and she went into labour after nine days as an inpatient (26 weeks). The first twin, Toby was relatively well, breathing on his own for the first few hours. Jon however struggled and was "very very poorly when he was born." A little over 24 hours later Esther was woken during the night for permission to put Jon onto an oscillating ventilator "because the normal ventilator wasn't working". She was approached again at 7am when she was told that "he was still poorly and it obviously wasn't working." It was at this point that the INNOVO Trial was mentioned. Esther was required to make a fast decision on her own. She could not understand the information that she was given and at first she felt that she could not make the decision.

> I did say at the time, "I can't make a decision because my husband's not here." And they [said] that if he was going to be part of the trial they needed to act quite quickly because he was poorly. So that's why I made a decision while [he] wasn't there, because I felt like we didn't have enough time to wait. ... Even if I [had] rung [him] and said "Come down now." It's still an hour and ... I'd never have forgiven myself if something would have happened in that hour while I was waiting for [him].

Even in these difficult circumstances, parents can make it very clear, as did Esther, that they can focus and make what they feel is a responsible decision. Although she struggled with the information, and felt under pressure of time, Esther appreciated the way in which the request that she make this decision was made. She trusted that the staff were "trying to do the best they can" and could see why she needed to act.

> I got the impression that we didn't have ten minutes for me to sit and think about it. I mean he didn't rush me into a decision at all, but I just got the impression that I didn't have maybe an hour or so to sit and think about it because Jon [could deteriorate] ... for an hour longer, which it difficult isn't it? It's hard for them then. *(i.e. the neonatologists)* (Int.73 Esther)

One interview in particular conveyed very strongly the poignancy of the parental situation and how their experience with a trial can have lasting effects. Carly gave birth to twins six weeks early. Both babies were in a poor condition and had contracted an infection (no further details given in the interview). One baby, Amy, was eligible for the INNOVO Trial. Their description of the events surrounding their consent to enrol her in the trial was somewhat disjointed. They described how a consultant had characterized the situation. Carly repeatedly focused on what was for her the most important element of what she said they were told: "It's her last chance. If she doesn't get it she'll probably die ... but if she gets this she's getting a last chance." Peter said that they decided to consent to the INNOVO Trial "as soon as he said it's the last [chance]". He gave a description of the consultant's explanation of why the use of nitric oxide was randomised as "some doctors think it does work, some think it's nothing to do with that, the babies just pick up". It seemed in this account as if the parents felt that INO was being randomised because doctors could not agree whether it was useful or not. Whilst this is not at all far from the truth, there was a subtle implication that this was largely a way to manage uncertainty. They did not present the trial as in any way evaluative or as a form of limiting exposure to an untested drug and this was a crucial element in their understanding of their experiences. Carly felt that "everyone should get the chance at it."

The news that Amy had been allocated to standard care was devastating. With INO no longer a possibility they felt that they were left "just sitting there watching her die". They felt that they process was particularly cruel, "a totally horrible thing to do." The key element in their experience was a sense of having a potential solution

dangled in front of them, a solution which their doctor was then powerless to access. They felt that he too was upset at the allocation. Peter made it clear that he did not hold their consultant responsible, saying "we never blamed [him]. It's somewhere else along the line isn't it where all that comes from. It's not the doctors at the hospitals." Both babies were baptised in hospital and Amy died after six days. Carly made a poignant comment, a point that she returned to several times.

> That's what goes on in my head, you know, if she would have got it maybe she might be still here. (Carly Int.75)

Where a trial is discussed in the light of little or no alternative treatment, it is perhaps not surprising that it is seen as a last ditch attempt when all else has failed. In the most extreme cases this could lead to a situation where parents are asked to consider research at a very late stage in the course of their baby's illness, essentially as a rescue therapy. The account of one couple, Erica and Howard, is described in detail in Box 10 below. It is singled out as being particularly important because it gives an indication of how parents can make rapid decisions based on a mix of many of the emotions described above. It also describes from the parental perspective, the situation described by several neonatologists in previous chapters where INO is used as a rescue therapy. The trial is a gamble at this stage, for professionals and for parents alike.

Erica and Howard

Erica and Howard were told that after a scan that their baby was affected by hydrops. At 34 weeks Erica was hospitalised and they were told of the likelihood of a poor prognosis. She soon went into spontaneous labour, and underwent an emergency caesarean section with a general anaesthetic. Howard was given a brief glimpse of the baby, Jenny, as she was taken straight to the NICU. Although very swollen, he felt that she was "beautiful". On spending time with her on the NICU he came to see that she was "very damaged" and described her chances as "20 to 30 per cent". Although he felt that there was little that could be done for her there they still felt at this stage that she may survive, as they were told that the first 24 hours would be crucial.

> It was just a case of monitoring her. It was all in Jenny's court really, there was not much that they could have done really apart from drain and monitor, and then if Jenny wanted to make a go of it they could have done more.

In the meantime Erica developed a bowel infection. She had not seen Jenny and although she had had some feedback she found it difficult to appreciate what was happening to the baby. At 5am on the morning after delivery Erica was woken by a neonatologist to discuss the possibility of enrolling Jenny in the INNOVO Trial. She was critically ill and declining rapidly. Howard was called back to the hospital, but there was no time to wait for him. Erica had to listen to the information in her bed and decide about the trial on her own. She was asked to give her decision in five minutes. She said "I was drugged up because I was on morphine, I was sort of out of it, I didn't know what was going on." She describes the conversation and her view of the trial as follows.

> He came to me and said "Baby isn't well so we can do this trial" he said "but there is only sixty in the country" or something "and it's like picking you out of a hat", and I turned round and said "What about her chances?" and he said to me "There isn't really much hope. She's deteriorating fast but it's up to you what you want to do" and I said "Go for it!"

Erica's account of the trial includes the availability of a treatment which may or may not benefit their daughter, and that it might not be accessible. Her focus in the interview was however solely on the potential of INO to help their situation.

> As soon as he said that, the main thing that was stuck in my mind was anything that would help her then yeah go for it, it gave her a better chance. ... [E]ven though it was her last chance there was still hope.

The allocation was made very quickly and Jenny was to receive INO. Howard arrived and they went to see her together. Jenny deteriorated further and INO was not used. Howard described the timing:

> I got there for about twenty past five. ... Erica [had] already given the nod about the trial about ten past and at half past five you were being wheeled in to say our goodbyes. By half past seven Jenny was dead.

There are important technical preparations which have to be made in order to administer nitric oxide for the trial. From the details given in the interview it is not possible to say whether there was simply not enough time to make these preparations or whether Jenny was ultimately too sick to undergo any changes to her circumstances. Erica and Howard were however left with the impression that the trial involved allocation to a ventilator which had to be brought to the hospital. They felt that there had not been time to get the ventilator to them. They were frustrated at the timing, feeling that they had been asked about the trial at such a late stage, despite the fact that Jenny's condition was clear from a week before she was born. Erica felt that she would have preferred to read material in advance so that a decision could have been made at an earlier stage. When she finally saw her daughter she realized just how ill she was. Erica accepted that she would not now receive INO and they chose to have Jenny removed from her ventilator. She found herself reflecting on their earlier fight to save her.

> When I saw her I thought is it worth it, I mean as to what problems will she have if she does survive, there is a chance that she will be blind, they thought she had brain damage and I thought no you know what are her chances in life realistically. There's no point in prolonging her life for another couple of years, if it was going to happen I'd rather it happened there and then.

For Howard, who described himself as "bitter" and "really disappointed", there was the sense that they had been lucky to gain access to the trial but that an opportunity had been missed, given what they had been told about the importance of the first 24 hours.

> [I]f we'd maybe been offered any time before when Jenny had could go either way, a chance, great, fair do's, [but] by then she was virtually gone, ... she was damaged beyond belief, so even if they would have had the chance to put her on the machine it wouldn't have done her the slightest bit of good anyway, she was gone. She was well and truly gone.

Erica later found a website which gave information about INO which made her feel that Jenny may have survived had they been offered the trial earlier. She said that she was feeling "What if...?". In retrospect Howard described the trial as potentially offering them something important but that ultimately it may have had "a detrimental effect" in raising unrealistic expectations.

Box 10. Account of consent when no other options exist - Erica and Howard (Int.80 INNOVO)

Importance attached to contributing to research

The data which have been presented have already given an indication of some of the parental reactions to the suggestion that their baby could take part in research. Here the degree of importance that the parents specifically attached to making a contribution to research at the time that they made their decisions is considered.

At one extreme there were those who instinctively recoiled from the idea of research, such as Shelley and Evan (Int.47 CANDA) and Gillian and Kelvin (Int.48 CANDA)[56], and at the other were parents such as Gina and Matt (Int.56 CANDA) who were so keen to contribute to research that they agreed as soon as the trial was mentioned, without further consideration of any of the available details. Within these extremes there were some parents for whom the idea of contributing to medical science was not part of their decisions, and some who were pleased that others might benefit but for whom this was not a priority.

Where parents felt that contributing to research was not part of their consideration, this could lead to statements such as that from Bryan who made it clear that his sick son was his first and only priority.

> At the time I didn't give a monkeys about anybody else. All you're thinking about is what's lying there, so if it helps him then fair enough. Later on, when you

[56] The views of Shelley,Evan, Gillian and Kelvin are considered in detail in the following chapter.

> probably sit and talk together about this, if it does help other people, great, but at the time, no, sorry, I'd just got a one-track mind. I wasn't bothered about anything else. (Bryan Int.64 INNOVO)

For those who were discomforted by the idea of research, their impulse to protect their baby could clash with the wish to make a contribution to medical science. This feeling was present in several interviews, often as an initial reaction which was overcome on further discussion or reflections, as was the case with Judith and Sean. Their account conveys something of how reactions to research can become intermingled with the need for care, allowing anxiety to be overridden.

> Judith: We agreed to do it because we wanted to just try anything and everything. ... But even so, it was a bit - I mean I felt a bit like .. ooh, it's research ... But then it's only a gas they were giving him to breathe. It wasn't like they were ... you know. But it still made me think, oh it's research, you know, they don't want to be doing any experiments and stuff, do you know what I mean?
>
> CS: Yeah. Did you say that to [the doctor]?
>
> Sean: Yeah. You did. ... He said it was entirely up to us ... and said that even though it is research, it's giving him every chance you can, really. (Int.79 INNOVO)

In some cases this initial reaction was overcome, with a different emphasis on the role of the individual participant. For Joyce further consideration led her to feel that the research would be valuable to others.

> Research when you've just had a baby, you think, eeh God! What's it all about? ... But it's got to be started somewhere along the line, hasn't it, and if there was no research done in the past it wouldn't be the way it was today would it? So I mean now, when I think, it's been good to take part ... [and] I'll explain to [the baby] one day "You might [have made] things a bit better son". (Joyce Int.41/69 INNOVO)

There was a group of parents who appeared to be rather non-plussed by the fact that they were being asked to consider making a contribution to research. That is not at all to say that they were indifferent to the decision that they had to make, but that the fact that the interventions on offer were being assessed did not figure greatly as an issue. Typical comments for this group of parents, when asked what they felt about being asked to take part in research, were:

It doesn't bother me at all, because I knew whatever way, like he would be helping somebody in the future, kind of thing, yeah. (Wendy Int.45 CANDA)

Fine, no problem, yeah, if it's going to help other people in the long run, fine by me, yeah. (Freda Int.50 CANDA)

I felt happy to be taking part in it, you know, because I thought if it doesn't do me any good it might help other people later on. (Jill Int.51 CANDA)

The attraction of contributing to research was made easier where parents felt that there were no risks associated with a trial. Teresa and Simon were "quite keen" to take part in the CANDA Trial, hoping that it would "benefit other children in the future". Crucially they saw the trial in very benign terms.

Nobody's going to lose from it, nobody's going to sort of be harmed by that, that's what we thought. It's going to benefit other people and it's going to benefit us. (Simon Int.58)

There were some parents who were specifically attracted to the ability to contribute to research. The possibility that something could be gained from such a difficult situation could be a direct influence on their decision. Linda and Douglas had used assisted conception and were "over the moon" to find that Linda was pregnant with triplets. Two of the three babies were born in a poor condition after a very complicated vaginal delivery initiated after Linda went into early labour (24 weeks). Douglas had some difficulty remembering the conversation about the CANDA Trial, but Linda described how it took place with her "bent double" having "strong contractions". The registrar who approached them left the trial literature for them to consider. They read the paperwork and Douglas said "we agreed straight away". Linda said "we didn't hesitate". When they were asked to sum up their reasons it seems that their clear priority was to contribute to research.

Linda: The situation Douglas and I found ourselves in is daunting enough, but to know that maybe years down the line ... our boys being in that trial might help somebody or make somebody else's life that little bit easier, or a baby's life that little bit easier – there's no comparison is there?

Douglas: No

CS: So it was essentially to benefit other people?

Linda: Yeah

CS: Did you feel at all that it might benefit your children?

Douglas: Well, we hoped so.

Linda: We hoped it would. (Linda & Douglas Int.59)

Both parents said that there was not much time to make their decision and Linda said that "our minds were just all a jumble". Neither could remember many details about the CANDA Trial; Linda described it at first as involving oxygen. Some elements gradually came back to them during the course of the interview but both felt that it would have been very difficult for them to gain much of an understanding of the research in their situation. Their decision was based not on an evaluation of the merits of the CANDA Trial itself but on the value of medical research and a sense of empathy with others in a similar predicament to themselves. This was also very much the case for Cathy and Kevin, and Gina and Matt.

Cathy explained that there was a direct connection between previous research, from which they were themselves beneficiaries, and research that might change the future.

> Our feeling is that other people must have gone through trials to get medicine advanced to the point where our [baby] would survive and therefore we were involved in a trial to get the next lot of babies, with any luck, on. And if everybody did that, it might move on a bit faster. (Cathy Int.57 CANDA).

Gina and Matt felt that they had already reaped the benefits of research in their experiences with their first premature baby who died. Second time around they had their opportunity to make what they felt was an important contribution to medical research. Matt explained:

> One thing we believe in is research. The only reason he's alive now, and the only reason that [our first baby] managed to stay alive for a fortnight was because of progress. You cannot progress without research, and tests. It's just impossible, isn't it?

They felt so strongly that they did not feel the need to try to understand the research that they were being offered. The fact that the CANDA Trial offered an opportunity

to become actively involved in research was sufficient for them to consent immediately.

> I didn't really understand ... about the research. To tell you the honest truth, I didn't understand. ... I feel that [it is] the only way that these children are going to survive, and they are going [to] get [as far as] they've come in the last fifty years, you know. Where are we going to be in the next fifty years if you don't take part in the newest research? They're going to be the same as they are now. And there's going to be babies dying. Whereas if you take part, maybes in another fifty years, there's going to be such a slim percent of these babies dying, you know. A lot more of the ones that are surviving are not going to have the same breathing problems. (Matt Int.56)

In a small number of cases the parents discussed how they felt that the ability to contribute to research could serve as a form of emotional insurance, allowing them to make some sense of the situation should their baby die. Kate's explanation of this element of her decision-making process still caused her to feel very emotional, as conveyed in this extract from her interview. Her baby survived but at the time of considering the INNOVO Trial, anxiety that she might die was at the forefront of Kate's mind.

> Kate: I think to be honest with you, amongst my blur of tears, that was one of the biggest things I could think of, the fact that if she did die - oh dear all emotional now - but if she did die then probably at some point - on some level - oh dear! Oh! (Pause) Oh!
>
> CS: Would you like to stop, or are you ...
>
> Kate: I'll be alright. I mean at some level that she probably would have helped by being there. So I think it's actually quite comforting to have that there.
>
> CS: Yeah.
>
> Kate: So it was good. It was a good thing to think that probably her being here hadn't been a waste of time.
>
> CS: Yeah. I've certainly had ... some parents who have felt that quite clearly at the time. Other parents have felt that feeling came later.
>
> Kate: I think mine actually came there but it comes very much now as well. Yeah, it would have made some sense of her being here because otherwise it was just like, what was the point in her being born ... to kind of die? (Kate Int.63)

Reasons for a slower decision

Whilst it has been shown that the majority of parents made their decisions about enrolment in a trial vary quickly, there were 11 cases where parents did not make such rapid decisions (5 CANDA, 6 INNOVO). This is in spite of the fact that they often shared the same dominant emotions as the parents who did make rapid decisions, and were faced with similar situations. Three reasons for the slower decisions were identified as:

- Time was available
- Parents wanted further discussion
- The decision was difficult

Time was available

The parents could take their lead from those who discussed trial participation with them. Where their style was more leisurely they could feel that they too could take time to reflect, albeit with some constraints. Some of those who took more time were in less acute circumstances than many of the parents who made rapid decisions. A sense of not being rushed allowed some parents to take time to consider their choice; two of the three cases where parents were offered more than 24 hours to decide did take the time that was available. Tessa and Bill's baby was born at term and gradually declined.

> They said I could take as much time as I wanted .... [within] a certain time you know as [the baby] did need something to be done. They didn't rush me into making a decision. [The doctor] said "I'll leave [the form] with you, ... and I'll leave you to talk and you come down to me when you're ready." So there was no pressure on the doctor's part. He was really good, ...sitting talking to us for a good half hour, forty five minutes explaining everything to us. He went through everything. (Tessa Int.81 INNOVO)

Glenda (Int.55) who spent seven weeks in hospital with pre-eclampsia before her baby was delivered was very bored as an inpatient and was pleased to be approached about the CANDA Trial; "the thought of having somebody to talk to was great." She did not discuss why she took additional time to make her decision but it seems likely that there was simply no need for a fast decision.

Parents wanted further discussion

In 4 of the 11 cases where parents made slower decisions, the women were approached to discuss a trial without their partners being present, and in 1 case a man was in this position. The lone women made up their minds fairly quickly but they wanted to confirm their decision with their partners. For Heather and Jeremy (Int.77 INNOVO) whose story was described earlier, their actual decision, made by telephone as Heather had not been transferred to the same hospital as her baby, was made very quickly. It was however deliberately delayed by Jeremy until they could make a shared decision. Cilla (Int.60 CANDA) delayed her decision until she could get the advice of a friend who was a paediatric nurse and Janine (Int.49) discussed the CANDA Trial further with midwifery staff, albeit at their instigation.

The decision was difficult

In a small number of instances the parents found the decision to be very difficult and needed to take time to be sure that they were doing the right thing. This was the case for Tessa and Bill (Bill was not interviewed) who were offered enrolment in the INNOVO Trial. They had had a very preterm baby previously who had survived for four months. This time the baby appeared healthy and was delivered by planned caesarean near term (37 weeks). The baby gradually declined and was taken to the NICU, a very difficult environment for Tessa as her previous baby had died in the same unit. She could see the cot where she was cared for and in which she was baptised. One day she saw screens placed round another baby who was baptised in the same cot. The baby was affected by Respiratory Distress Syndrome and a consultant explained that the seriousness of the situation.

> He said that if it didn't work they'd have a helicopter on standby to take him to Leicester to put him on ECMO, you know, ECMO, it's the bypass machine isn't it?

Tessa explained that the mention of a helicopter on stand by made it "hit home how ill he was." This added to her confusion.

> To be honest it was just like going in one ear and coming out the other ... I remember saying to him, "Is there a chance we can lose him?" and he said "Yeah"

> then after that I just wasn't thinking straight at all. ... He went back down and I didn't want to sign the form because he said to me "It's only been on trial, it hasn't been proved". ... It's not been proven. There's no known side effects of it but I was like that, kind of thing, I didn't really want him to have it. I said to Bill "What if it makes him worse rather than better?"

They were given plenty of time but found the decision difficult. Tessa described how she worried about time ticking on while they were turning over what to do.

> I was thinking, the longer I take to make this decision, the longer [the baby] has to wait for something to help him. You know if I took like twenty-four hours to decide, and in them twenty-four hours something bad might have happened to [him], he might have deteriorated so much that the nitric oxide might not have [worked] on him. ... We made a decision in about two hours.... Bill was all for it, totally. I was in two minds ... My mum and Bill's mum [thought] we've got nothing to loose ... My mum said, "Well it's between life and death" so reluctantly I did sign the paper. (Tessa Int.81INNOVO)

Another example of parents who made a slower decision because they found the choice to be difficult is presented later in detail in Box 11 (Isobel and Roger Int.65 INNOVO).

Part III – The role of risk in decision making.

Quantitative and qualitative approaches to understanding the role of risk

The data described above suggest that there are important ways in which parental choices are shaped by the difficult circumstances in which they find themselves and the style and content of their discussion of a trial. Appropriate questions given these difficulties and the speed at which most of the decision were made, are:

- Were the differences in likely risks[57] of the two trials reflected in the parental perceptions of risk?
- Did the parental perceptions of risk relate to the speed at which they made their decisions?

The number of decisions represented in this study allows these questions to be explored firstly in a basic quantitative format, and then with a qualitative approach.

[57] Using the risks presented in the trial protocols and by the senior trialists who were interviewed, the CANDA Trial would be seen as not risky, and the INNOVO Trial as involving some risks.

Quantitative data

Comparison of perceptions of risk in relation to the two trials

The parents were asked whether they had felt that there might be any benefits or risks for their baby as a result of taking part in the trial that they were offered. They were almost equally divided in their views; in 21 interviews the parents felt there were risks associated with participation for their baby and in 19 they felt there were no risks. Although the trials were seen as very different by the neonatologists, the distribution of the parental perceptions of the possible risks involved showed that the trials were viewed in very similar terms; the INNOVO Trial was seen as involving a risk in 11 interviews and no risk in 10 and the CANDA Trial as involving a risk in 8 interviews and no risk in 11 as shown in Table 11.

	CANDA		INNOVO	Total by risk	
	Accepted	Refused	Accepted	Accepted	Refused
No risk	9	2	10	19	2
Risk	6	2	11	17	2
Total decisions	19		21	40	

Table 11. View of potential risks of the two trials

Relationship between perception of risk and speed of decision making

For just over half of the decisions that were made about enrolment in the INNOVO and CANDA Trials, the parents were judged to have felt that there were no risks and many made their decisions very quickly. An examination of the relationship between these two factors is given in Table 12.

These factors were cross-tabulated and suggest that there is a relationship between parental perception of risk (which is independent of the trial under consideration) and the time taken to make the decisions. This can be considered in two ways:

- Most of the parents who made rapid decisions felt that there were no risks (20/29) whilst almost all of those who did not make rapid decisions felt that there were risks (10/11).

- The vast majority of those who felt that there were no risks decided immediately (20/21) whilst for those who felt that there were risks, there was an equal split as to whether or not they made a rapid decision (9 immediate and 10 not immediate).

Perception of risk	**Time taken**				**Total**
	Decided Immediately		Did not decide immediately		
	CANDA	INNOVO	CANDA	INNOVO	
Perceived no risk	10	10	1	-	21
Perceived risk	4	5	4	6	19
	14	15	5	6	
	29		11		40

Table 12. Speed of decision-making in relation to views of potential risk

A χ^2–test shows the relationship between speed of decision making and perception of risk is highly unlikely to be due to chance (χ^2 with 1 degree of freedom = 9.19; $p<0.002$). The coding system that was used is given for reference in Table 13 below.

	Time available				Time taken		Perceived risk	
	>24 hrs	short	Minimal		Instant or not		Risk	No risk
CANDA								
41*	Unclear				X		✓	
42**			✓		✓		✓	
43			✓		✓			✓
44	✓				✓			✓
45			✓		✓		✓	
46			✓		✓		✓	
47+			✓		✓			✓
48+	Unclear				X		✓	
49+			✓		✓		✓	
50			✓		✓			✓
51			✓		✓			✓
52	No data for this interview							
53			✓		✓			✓
54			✓		✓			✓
55	✓				X			✓
56			✓		✓			✓
57		✓			X		✓	
58			✓		✓			✓
59		✓			✓			✓
60+	Unclear				X		✓	
	2	2	12		14		8	11
INNOVO								
61			✓		✓			✓
62			✓		✓		✓	
63			✓		✓			✓
64		✓			✓			✓
65		✓			X		✓	
66			✓		✓		✓	
67			✓		✓			✓
68		✓			✓			✓
69*		✓			X		✓	
70**			✓		✓		✓	
71			✓		✓			✓
72	Unclear				✓			✓
73			✓		✓		✓	
74		✓			X		✓	
75		✓			✓			✓
76			✓		✓		✓	
77	✓				X		✓	
78			✓		✓			✓
79		✓			X		✓	
80		✓			✓			✓
81		✓			X		✓	
	1	9	10		15		11	10
TOTAL	3	11	22		39		19	21

* Ints 41 and 69 are the same mother

** Ints 42 and 70 are the same mother

+ parents who declined to enrol their baby in the CANDA Trial

Table 13. Coding for each interview in terms of time available for decisions, time taken and perception of risk

Qualitative data

The CANDA Trial

The two sources of information about possible risks associated with trials are the neonatologists and the parental information leaflets. From the interviews with the neonatologists it was clear that they did not view the CANDA Trial as risky. The trial information leaflet explains in some detail the key elements of the research, including a reference to the possibility that there may be differences between the two forms of surfactant in terms of their safety, as the extract below shows:

> We are currently looking at two different surfactants. The first, ***ALEC*** (Artificial Lung Expanding Compound), is a man-made artificial surfactant and has been used in [this hospital] and other centres for several years. The second, ***Curosurf***, is a naturally occurring surfactant and is derived from pig lungs. This also has been used in many Special Care Units for some time.
>
> Both artificial and natural surfactants have been shown to work in preterm babies. Natural surfactants actually work faster but whether this means they are better is still unclear. Artificial surfactants on the other hand are cheaper and may be safer, not being derived from animals. The only way to be sure about this is to perform trials making a randomised decision about which surfactant a baby will receive, and then comparing the two groups of babies (CANDA Trial parental information leaflet – Appendix F).

The extent to which parents drew upon the information leaflet for the CANDA Trial is unclear. Certainly there were parents who said that they did not receive a leaflet, and there were others who were given written information but said that they were not in a position to read it. This was especially the case for the women who were in labour. It was noticeable that unlike many of the parents associated with the INNOVO and ECMO trials[58], none of those associated with the CANDA Trial brought out, or mentioned keeping a copy of the leaflet, at interview. Key elements mentioned in the information leaflet, the distinction between natural and artificial substances, the pig connection, and the different speed at which the surfactants work, were all frequently discussed in the interviews in relation to risk.

[58] Parents commonly brought out mementos of their baby's time in a NICU. They felt that the information leaflets (which for the ECMO Trial included photographs of the ECMO circuit), would help their child to understand what had happened when they were older.

As shown above, the parents were equally divided in terms of their perception of risk for the CANDA Trial. Further details on those who saw no risks, and those who saw risks are given below.

The CANDA Trial involved no risk

In 11 interviews the parents presented the CANDA Trial as involving no risks for their baby. Typically they said that they were told that the trial may or may not help their situation and that it would not make things any worse. In a small number of cases parents felt that they were explicitly told that the trial offered an important opportunity, with effectively no downside, "a win-win situation". Matt said: "Wasn't no risks. ... One wasn't better than the other. They both had their benefits" (Int.56).

It was often assumed that trials would not be carried out, and that a doctor would not offer them enrolment, if there were any possible risks for their baby.

> I thought that the risks ... couldn't really be that high, if you've got hospitals on one hand doing one, hospitals on the other doing [the other]... If something was drastically wrong with one of them, if there was a major advantage of one over the other then both wouldn't be in circulation. (Bernard Int.44)

The parents were very protective of their babies and where they felt that there were no risks associated with the trial, they often stated that they would not have consented if they felt there was any danger to their baby. Charles commented:

> Obviously if I'd thought there was a risk of one of them was a lower quality then I wouldn't have done it. (Charles Int.46)

Freda's twins were both enrolled in the CANDA Trial, a particularly delicate situation if there are professional or parental perceptions of potential differences between intervention arms. Freda, like Charles, said that she would not have condoned any risk for her babies.

> [The neonatologist said] they are both near enough the same, you know. If she'd said one was lesser than the other I would have said "No. Give them both the same." (Freda Int.50)

Zoë was very confident about the safety of the trial:

> It felt like a fairly safe trial to be in because you were told "some hospitals use this, it works, some hospitals use this, it works, but we want to know categorically which is best." So either way you felt you were going to get something that works . ... The idea that there was some preferences was fine. (Zoë Int .44)

The CANDA Trial involved risk

In eight interviews the parents presented the CANDA Trial as involving some degree of risk for their baby. These were predominantly expressed in terms of the different origins of ALEC and Curosurf. The parental information mentioned that Curosurf is "derived from pigs" but just how was very unclear in the parental accounts[59]. None of the parents were aware that porcine surfactant is collected from the lungs of pigs and there were a number of different accounts of what was used in the trial. Some parents felt that they had been offered "animal fat" (Int.45), a transfusion of pig's blood, (Int.48), "bits of pig" (Int.49) and drugs derived from either "pig offal" (Int.46) or "pig's blood" (Int.51). For some parents the origin of Curosurf was simply irrelevant given their pressing concerns for their baby. Geoff (Int.43) dismissed the issue outright saying "I just wanted the best one." For others who felt that there were risks in this situation, the link with animals was unnerving:

> I didn't like the idea of that straightaway, I just thought I don't want [my] thirty week baby that's been nurtured inside me suddenly having pig derivative put inside it. (Janice Int.49)

At the time of the interviews the subject of BSE – 'Mad Cow Disease' and its transmutation into a human form – CJD, had recently been in the news, and this made parents wary about possible long-erm effects. For Cilla and Terry this was sufficient to make them decline the CANDA Trial.

> The thing I remember about it was thinking that it was pig surfactant and I think in the light of BSE, I wasn't sure whether I wanted any sort of animal products. ... [It was] just in case in years to come, there was some sort of link with any bizarre kind of new virus that was around, you know, that you just sort of don't know. (Cilla Int.60)

There was also some confusion over ALEC in relation to the term "artificial". It was interpreted by Gillian and Kelvin to mean that the trial would involve "artificial

[59] The parents were not asked how they thought it was derived but raised this issue spontaneously.

blood" which they said they "didn't feel comfortable with" (Kelvin Int.48). For Teresa and Simon the term led them to prefer Curosurf.

> We thought that was better really because it's more natural than an artificial one, we just thought it was more compatible than an artificial thing. (Teresa Int.58)

The INNOVO Trial

The parental information sheet for the INNOVO Trial discussed the possible risks of INO in very broad terms:

> The study will find out whether or not adding a gas (nitric oxide) to other ventilator gases allows babies like yours to breathe more easily. It will also find out if they get well sooner, and are healthier, or whether they would do better without nitric oxide.
>
> Neither you nor your doctor will be able to choose whether or not your baby receives nitric oxide. Instead this decision depends on chance, rather like the toss of a coin. This is important so that nitric oxide can be tested fairly. At this time there is not enough research to know if it is better or worse than the usual ventilatory gases alone. (INNOVO Trial parental information leaflet - Appendix G)

From the parental accounts, and comments made by the neonatologists, the neonatologists varied in the extent to which they supplemented the information leaflet with specific details of any risks that might be involved. The parents also varied in their ability and willingness to engage with the issue of risk.

The INNOVO Trial involved no risk

In 10 interviews parents presented the INNOVO Trial as involving no risk for their baby. As with the parents associated with the CANDA Trial it was common for parents to report that they were told that participation in the INNOVO Trial may or may not help their baby, but it would not make things worse. Two mothers indicated that their decisions were based on the absence of risk.

> You are willing to try anything provided there isn't a risk that it can do anything wrong, and that was the key. That was the key! (Rebecca Int.68)
>
> We decided because it had benefited people and as far as they knew, it hadn't done any damage. We decided "Yes" there and then. We might as well try it as soon as possible really, to see if it helped him. (Dorothy Int.64)

Michael, who was extremely anxious during the randomisation process and upset and angry on learning of allocation to the control arm, was asked whether he had any concerns about INO. He answered "No, because I really didn't know what it was" (Int.61). Similarly Frances said that she did not see INO as involving any risks but that that may have been a consequence of her circumstances – "You don't think that deeply. ... At the time it was on top of everything that was going on." (Int.72)

In one case a father, Keith, whose daughter had aspirated meconium on delivery, felt some concerns about the issue of experimentation. Notably he was reassured on the subject of INO.

> I was a bit dubious about it really because I thought well if it is only research it could go wrong. ... I mean it's like a crash test dummy isn't it. ... But there was no choice. They said it could make her better. They never said to me she could go worse off it. They never said that. They always said she would benefit from it so that's why I just signed the form. (Keith Int.67)

The INNOVO Trial involved risk

In 11 interviews parents presented the INNOVO Trial as involving some degree of risk for their baby. Where they talked about risks they often used quite hazy and unspecific terms. Nicky, for instance said:

> They didn't know if there would be any side effects, you know, it's just the chance you take because it's a trial. (Nicky Int.62)

Parents could be aware of the possibility of side effects but rarely spoke about what these might actually be. Belinda, who was under the impression that agreeing to the trial would mean that INO would definitely be used, gave an indication of how irrelevant long-term risks can seem at the time.

> I remember him saying that because it's a new trial they don't know what the long-term side effects will be, but I think when you are in that situation you don't really think about that. It was the here and now that was important, not the future. (Belinda Int.76)

Whilst taking a risk for their baby was something that some parents felt they would never do, for others parents it was the responsible thing to do. For Joyce, the situation

was so grave that the consultant's statements that he could not sanction simply giving her baby INO was extremely difficult. In her circumstances the possibility that INO might help her son was sufficiently persuasive to over-ride the possibility of long-term risk.

> He explained "There's nothing to lose... he's bad, he couldn't get any worse. ... I would love to come to you now and say "I'm going to put it in his machine. I'm going to give it now and see if it helps." But he said he [couldn't] because it wasn't a legalised thing and that in ten years time you could come back and your baby could be – you know – and you could sue. I was sobbing saying "But I wouldn't do that!" (Joyce Int.41/69)

A small number of parents focused on short-term risks. Given the precariousness of their baby's condition they were wary of initiating anything that might actually lead to a worsening of the situation. Cheryl felt "nervous" because she did not know whether or not she was "doing the right thing" but felt happier when she checked with her consultant and was told "I can't see it harming her." (Int.74). Some however, like Tessa quoted earlier, found that their concerns about possible risks complicated and delayed their decisions.

For Isobel and Roger, whose story and extracts from the tape-recording of their discussion with a consultant about the INNOVO Trial is presented as a case-study in Box 11, the impact of their view of risk upon their decision-making process provides a contrast to much of the data presented in this chapter. For them the offer of the INNOVO Trial created a major dilemma; the risks of participation were unacceptable, but turning down the trial and so access to the potential benefits of nitric oxide also constituted a risk. They took the time that was available to think through what they felt was "the hardest decision" they had ever had to make.

Isobel and Roger

After a placental abruption Isobel was taken by ambulance to hospital for an emergency caesarean section with general anaesthetic (26 weeks). She continued to bleed after surgery and underwent a second operation and was warned might involve a hysterectomy. The bleeding was controlled without a hysterectomy but Isobel was very ill and did not see her daughter, Janey, for four days. Roger divided his time between his critically ill daughter and his very sick partner. Janey made no progress. After several weeks of "rollercoaster emotions", Roger and Isobel were approached about the INNOVO Trial. The tape-recording of their conversation with a consultant indicates that they were given a very detailed account of the potential risks which might be associated with INO.

What the INNOVO study is about is comparing two ways of trying to help babies with their respiratory difficulties. One is called nitric oxide which is added in a very small amount to the ventilator. ... Nitric oxide is a gas that's in the atmosphere, largely from pollution actually. It's in car exhaust fumes, it's in cigarette smoke and it's also in us. ...[I]t helps to relax the blood vessels inside the body, particularly inside the lungs. ... Now in term infants ... there's quite a lot of evidence that it may have a role to play. But it's still not clear cut by any means, ... but the evidence begins to point a little way towards that. In the premature infants the evidence is far less clear cut whether there is a benefit above and beyond just using conventional treatments, and the reasons for that are that there are some side-effects also associated with the use of nitric oxide. Some of them are theoretical. In laboratory experiments certain things are seen, and ... there are side effects or reactions that are seen in adult human volunteers, so they may not necessarily apply to the prem baby. (Mother - No) But none the less they exist and it's important that you know that. (Pause)

The side-effects that we are concerned about - nitric oxide can cause inflammation inside the lungs particularly if combined with a high amount of oxygen, it causes damage to the lining and the cells of the lungs. It can make the platelets, which are the cells in the bloodstream that stop us bleeding, make them less sticky (Mother- Mm). .... In theory at least, it may interfere with DNA, the gene code you possess, how that repairs itself. These are theoretical concerns ... These aren't proven (Mother: No) but they're there and it would be dishonest for parents not to be told of these ... The upside ... is that, certainly in some children it appears that it does help the blood vessels to dilate and improve the amount of oxygen reaching the bloodstream so one is able to reduce the amount of support that babies are getting with the benefit [that we don't] use as much oxygen. ... [S]o there are some upsides to it and there are some theoretical downsides to it but the problem is that we're not in the position yet ... to identify for which babies the risk/ benefit (Mother: Right) is in favour of giving it and which babies actually we ought not to give it. (Mother: Mm) That's really the purpose of this study.

When it came to making a decision about the trial, Isobel and Roger explained how worried they were about tipping a delicate balance the wrong way.

> We were being put in a situation that was virtually impossible for us to make a decision, I mean if the expert didn't know what this drug might do to our baby, how were we expected to decide? We potentially could have been killing or making our baby worse because really it was unknown what the gas would do. (Isobel)

> He said, "For all we know it might actually go the other way, it might make her worse, the other alternative is that it may improve her in the short term." My view was that I didn't want to use it because it was such a gamble and we were potentially making a bad situation worse. I think it was the not knowing, I think it was the lack of information. (Roger)

After what felt like "a day of discussion" but which they agreed was probably half an hour, they decided that turning down the trial would be a risk in itself. They made their decision, unlike most other parents in this study who consented to the INNOVO trial, without hoping to access INO. Isobel described it as "one of the hardest decisions I think I've ever had to make." Roger commented:

> It was absolutely hideous, it was a bad bad experience, especially at that stage to have to make a decision like that then. It's bad but it had to be done, and my view was that we should try and do everything that we possibly could and therefore we must go for the test, but I was hoping that when they tossed the coin we wouldn't get it.

Isobel and Roger's thought processes hinged on how to deal with illness and the risks inherent in a new treatment. The random element of the trial became the means of dealing with that degree of risk. For most parents the decision-making process was very much in the context of management of care and was close in style to other decisions which would have to be made in the context of illness. For Isobel and Roger the trial situation was at the heart of the process. Their decision, which was made in full light of the known facts, was certainly complicated by the information they were given and by the lack of certainty that existed, but in their interview they argued that it was right that they went through this process. They thought very highly of their consultant and were clear that however difficult their experience, it had been wholly appropriate to have the information about risk and uncertainty upon which to base their very difficult decision.

Box 11. Account of consent in relation to risk - Isobel & Roger (Int.65 INNOVO

Discussion

The factors affecting parental decision-making about participation or non-participation in the INNOVO and CANDA Trials were undoubtedly complicated, drawing on a range of influences to which there were highly individual responses. Parental decisions were in part a product of an emotional setting, and were shaped by a discussion in which complex and potentially stressful information was given and received in very different ways. The presence or absence of a trusting relationship with a professional is an important factor, as is the extent of their tolerance, interest or enthusiasm for making a contribution to medical research. This inherent complexity and variety that exists is belied by the fact that so many of the parents, whatever they made of their situation, made the same decision, that is to accept trial participation. What is more, the majority did so at great speed, as was suggested by the neonatologists interviewed for this study.

Parents made their rapid decisions in very constrained circumstances: the situation was often urgent with little time for deliberation. The neonatologists were concerned that in these circumstances, the quality of parental decisions might be compromised by the speed at which they are made. Certainly there were some cases, notably of women in labour, where parents felt simply unable to participate in the processes required for consent, and where a rapid decision was made without engagement with the substantive issues. In some cases decisions were made very quickly, despite the fact that more time was available.

Although the neonatologists were often worried that rapid decision-making suggested a lack of engagement with the information they were offering, from the parental accounts it would seem that they felt that they had some appreciation of the issues involved. In situations where it could be difficult to focus on the broader details, many parents appeared to sift information until they perceived a critical factor (it might help; it won't harm; there might be risks; it might benefit future babies; the doctor thinks it is a good idea; your baby might die). This crucial detail then seemed to propel them on to make a rapid decision about trial participation. Other information could be to some extent extraneous. For some this resulted in them eagerly joining a trial in the hope of accessing a potentially life-saving treatment; for others the unacceptability of possible risks was the element which led to a quick decision to decline participation. These might be termed 'instinctive consent' and 'instinctive refusal'. For many parents, 'instinctive consent' did not appear to be closely related to the actual conditions set by the trials, to their view of the trials, or to medical research more generally. For others, such as Isobel and Roger, there was a close engagement with the implications of participating or not participating in a trial.

The distinction between care and research could be very unclear in the parental accounts. When parents spoke positively about medical research generally, or the trials in particular, it was not always clear whether these were driving forces in their decisions or a position that they have come to in retrospect. When the parents discussed how they felt about making a contribution to research, they often used very broad and abstract notions of "helping", rather than focusing on their role in enabling specific people to answer specific research questions. It may be that what they were demonstrating was a reaction to research in principle. Here they can be very positive

as long as the issue of contributing to medical research is separated from the notion of risk. Parents often said that if they felt there were risks to their baby they would not have agreed to participate.

The parents did not appear to share the neonatologists' feelings that rapid decisions are problematic. In fact the converse was true. In their accounts of the speed at which they reacted to the situation it was quite obvious that they felt that they were acting swiftly in the best interests of their child. Responsible parenting could include accepting possible risks in the hope of gaining a much needed advantage for their baby. Even in some of the cases where the research itself did not seem to the parents to be a big issue, they still could feel that they were making an onerous decision. In fulfilling their obligation to protect their child, many felt that they also took on personal responsibility if anything should happen to the baby. It was very rare in this, and in the previous ECMO studies for parents to feel that allowing a treatment to be allocated within a trial would remove responsibility from them in any way.

While a perception of risk did not appear to affect whether or not the parents agreed to enrol their baby into a trial, it did seem to be linked to the speed at which they made their decision. In all but one case, those who perceived no risks made rapid decisions. Slower decisions were made by made parents who felt that there were risks. This may be because longer timeframes afforded greater opportunity to give or to take on board information about a trial, or because the perception of risks (actual or anticipated) leads to a more problematic and therefore time consuming decision-making process. For Isobel and Roger, whose consultant gave a very full and detailed description of the potential risks of the INNOVO Trial, the threat which they felt could be posed by the trial, coupled with the threat of inaction, served to intensify the difficulty of their position and to complicate and extend their decision-making process.

These data raise the important question, would the parents involved have made the same decision had the balance of likely risks and benefits been clearer? Not one parent said that they were unhappy with the choice that they had made, but we do not know if that view would still hold if they were more familiar with the possible risks and benefits. In the CANDA Trial for instance, there were some who consented as they were hoping to access a better treatment. Had it been clearer to them that both

surfactants at that time were thought to be equally effective, and that trial participation was not aimed at improving the care of their baby, their decision would have had a different basis. Parents who were aware of the possible risks associated with nitric oxide may have made a different choice. Those who rejected the CANDA Trial because they did not wish their baby to have a transfusion of pig's blood, may have consented had the reality of the treatment been explained in a way that they were able to understand and incorporate into their view of their baby's needs.

Although the parents did make their decisions quickly, these data suggest that they still went through an analytical process, based on what they felt were the key factors in their case. Parents filtered the information that they were given and went to what they felt was the heart of the matter, making their choice to protect their children as best as they could. This may or may not have included an assessment of potential risks. At the time of the offer of trial enrolment, most of the parents did not focus on the larger world of trials with responsibilities for a population as well as for individuals, but on the micro-world of their family, focusing in on what should be done for this one baby in the next few crucial hours. The parents had a very personal basis for their decisions, grounded in intense emotions and parental responsibility, and which could not easily be grafted on to the public world of clinical research with its wider concerns.

Chapter 8 – The decisions that parents make to decline trial participation

Refusals for the INNOVO and CANDA Trials

One particular aim of this research was to provide insights into the views of parents who declined to participate in the trials. Neonatal trials have been shown to have higher consent rates than other trials, with some reporting 100% acceptance (Campbell et al 1998). With so few parents rejecting trial participation, it is useful to consider how and why they might differ from the majority of parents who give their consent.

The two trials considered here do not have the extremely high consent rates reported above, but they still show what appears to be low numbers of refusal in comparison to trials in other settings. For the INNOVO Trial there were 168 babies whose parents accepted the trial, and parents of 10 were known to have refused[60] (94% accepted). For the CANDA Trial, parents of 199 babies accepted the trial, and parents of 37 were known to have refused (84% accepted).

As indicated in Chapter 4 it was not possible to interview any parents who had declined to participate in the INNOVO Trial, but four interviews were achieved with parents who decided against enrolling their baby in the CANDA Trial. With such a small number of interviews there are undoubtedly limitations to this data set. The most appropriate use of the material is therefore to treat each interview as a case study, examining the parental accounts in detail. In this way the nature of the individual experiences are brought to the fore and the value of this type of qualitative data is made clear.

[60] These are best approximations of consent rates (personal communication – Truesdale (INNOVO), Ainsworth (CANDA)). When parents declined participation this was not always reported to the trial co-ordinators. The figures therefore relate only to the known cases of refusal.

Four case studies

The parents in the four case studies have common experiences with those who accepted participation, and have already been referred to in the previous chapter. Exploration of commonality is important as this can suggest how information and insights can be generalised to other trial situations. In considering the various elements in these four unique accounts, it became clear that they are also valuable precisely because of their individuality. They are not simply idiosyncratic interpretations and reactions; they suggest important ways in which alienation and confusion about trials can arise, in three of the cases leading directly to the decision to decline to participate.

Cilla and Terry (Int.60)

Cilla started to bleed and to have intermittent pains at 28 weeks of pregnancy. She was sent home from hospital but returned when the pain continued and her waters broke. She went through a stressful six day period of uncertainty as to whether labour would progress but felt certain that her baby would not survive if delivered. She was reassured by a visit to the NICU but was still anxious and exhausted by the time her baby was born.

> It was tiring, because I never slept really from that Saturday night. I never had a full night's sleep. So it was just a very tiring week and obviously stress wise, it was quite tiring as well. And then the labour progressed but very slowly from that sort of Wednesday night into Thursday and sort of by Thursday afternoon I'd got to about eight centimetres dilated and then it stopped again.

Her baby was eventually born that evening after labour was accelerated.

Cilla could not remember when she discussed the CANDA Trial, fluctuating throughout the interview between feeling that it may have been in the period before delivery or that it could have taken place some days later on the NICU[61]. Terry thought that he was not present but could not be sure. The discussion may not be

[61] Although it was possible that parent could discuss the trial shortly after delivery, the trial would not have been offered at the much later period in the NICU that Cilla described .

anchored in their memories because of the nature of the stressful time preceding delivery, or because of how they perceived the trial.

> It was when I was by the cot side I remember somebody mentioning something about it. They might have asked me whether I'd decided which surfactant. It might have already been mentioned and they might have said, "Have you decided whether you're going to go with the trial?" Because the trial was for the pig surfactant, wasn't it? Yeah. But I just remember it not seeming to be such an important - you know it didn't seem - it was just one of the things that was happening. It didn't seem like a major event, it was just one of the things that was happening at that time. (Cilla)

Cilla's concern about the CANDA Trial related to the origins of Curosurf. She was very comfortable with the staff who offered the trial; she felt that, although stressed, she had benefited from her preparatory visit to the NICU and was positive about research. She telephoned a friend who was a paediatric nurse and discussed the trial further with her. She was very clear about the reasons for her decision – "I wasn't going onto the trial because I didn't want the pig surfactant." She was concerned about possible long-term risks which may emerge.

> The reason why [was] just in case in years to come there was some sort of link with any bizarre kind of new virus that was around, you just don't know, do you? ... I think in the light of BSE I wasn't sure whether I wanted any sort of animal products. If anything happened in years to come that they found that there was - you know with the human growth hormone - they found that there was something like that kind of link. I thought if there was a synthetic equivalent I would go for that.

For Cilla the conditions of the CANDA Trial were important and this seemed to be a crucial element in her decision. In a comment which is similar to some of those made by the neonatologists, she explained how her choice had been made easier by the certainty that her baby would receive a form of surfactant whatever she decided. She understood that if she turned down the trial her baby would be given ALEC.

> I wasn't choosing to have or to have not, it was one or another *[i.e surfactant within or outwith the trial]* so it didn't seem too huge a responsibility. .... I knew he needed surfactant. As long as he was getting some surfactant, you know, as long as it did the job.

Before making her decision she also checked whether she would be passing over any advantages by closing down possible access to Curosurf.

> Cilla: I did ask if ... they felt at this stage there were any real benefits with the pig surfactant.
>
> CS: If they had, would you have let that override your concerns about the nature of that surfactant?
>
> Cilla: Possibly, yeah, if it had proven to, you know, aid ventilation.

An important element in this decision was that Cilla appreciated what alternatives were available. She saw the trial as involving unknown risks which were not counterbalanced by possible benefits. She knew that surfactant was an appropriate and useful treatment and that her baby would receive surfactant regardless. It is this knowledge which allowed her to make what she felt was a well-considered choice. Her lack of clarity in her recollection of other elements of the discussion were to some extent irrelevant. As far as she was concerned, she had focused on the crux of the matter, confirmed the soundness of her decision with a trusted friend, and felt that she had acted in the best long-term interests of her baby. Both parents were very comfortable with the decision not to take part in the CANDA Trial.

Gillian and Kelvin (Int.48)

Gillian was 17 when she and her partner, Kelvin, made their decision about the CANDA Trial. She developed pre-eclampsia at 27 weeks of pregnancy and after two weeks as an inpatient in her local hospital, she was transferred to another hospital for delivery. When she was told that labour was to be induced, Gillian asked for a caesarean section with a general anaesthetic instead, for fear of seeing "anything horrible". On further questioning her fear related to the possibility of witnessing her baby stillborn or die on delivery. She was induced but as labour failed to progress and the baby became distressed, she did in fact undergo an emergency caesarean with a general anaesthetic. While she was in labour she was approached about a trial. She was not clear what the research was, but said that she consented.

> When I was in labour someone come in and asked if they could do medical research on him, and I said yeah because they wouldn't know what they do today if they hadn't done nothing like that.

It is likely that this was the CANDA Trial although this was a surprise as Gillian was listed in the trial records as having declined to participate in the trial. Her partner,

Kelvin, joined the interview part of the way through. The introduction of a third party completely changed the direction and content of the discussion, mainly through his different recollection of events and the dynamic between the couple as they tried between them to piece together the events and to work out what had happened.

It is difficult to understand exactly what model of the trial they held, but it appears that two trials merged into one in their recollection. It seems likely that they declined the CANDA Trial during labour, and accepted another trial involving a comparison of long and short lines for delivering nutrition at a later stage[62]. At times the two trials seem to be discrete in their account but on further consideration of the data this may well be because they were asked separate questions about the trials, almost forcing them to make a distinction[63]. At one point the couple discussed how they had taken several days to make their decision about participating, something which would not have been possible for the CANDA Trial, again suggesting that the two trials were discussed on separate occasions but have become linked in their memories. Mostly they were described as one decision about one trial which involved two elements, the long and short lines, which they were happy about and accepted, and the content of the lines, which they rejected. This is the basis of their amalgamated account of the decision to turn down the trial.

> Kelvin: I know there was something mentioned about a long line and a short line, and I think it was the long line one that they wanted to try more, because they were only used to using the short line, or it might have been the other way round. And there was two, there was ALEC and there was another one where they used artificial blood in the other one, is that right, artificial blood?
>
> Gillian: Yeah. I can't remember.
>
> Kelvin: And I think we didn't feel comfortable with using the artificial blood.
>
> Gillian: That one, yeah, they were going to use pigs' blood or something?
>
> Kelvin: They were going to use pigs' blood, so we didn't um ...

---

[62] As this trial had not included in the terms of the Research Ethics Committee Approval for SVPPT it was not possible to ask the trial co-ordinators for any clarification of whether or not Gillian and Kelvin's son was enrolled in their research.

[63] The accounts given by Gillian and Kelvin were convoluted and during the interview the fusing of the two trials was not clear. This emerged on careful examination of the interview transcript. In an attempt to ensure that the data would be understandable and usable, the parents were asked questions for clarification during the course of the interview which presented them with the two trials as separate. Had this not happened there would have probably been no distinction made between the trials.

CS: And were you asked about that at the same time, or was it a different doctor?

Kelvin: It was the same time, everything was asked at the same time.

It seems as if the long and the short lines in their account were a means to deliver a blood transfusion, one of which could contain "artificial" blood. Kelvin explained:

Kelvin: We weren't bothered about the lines or anything, because at the end of the day it was just a line and there was that many lines in him anyway, that it didn't make a difference, but the fact that they were using artificial blood was something that neither of us was happy about.

CS: Yeah, did they tell you what they would do instead?

Gillian: He just had blood transfusions, normal blood transfusions.

The parents were asked whether it was a big decision to make, and what it felt like. Interestingly they spoke at the same time, before there was a chance of influencing each other's accounts. Kelvin exclaimed "Massive! Massive!" and Gillian said "Nothing, you could just sign there and there." Gillian contributed to the interview far less once Kelvin arrived and she may have been confused at this point given her original feeling that she had consented to the trial during labour in order to help other people. For Kelvin the enormity of the decision related to the responsibility he felt for making a potentially influential choice for a baby which was in such a vulnerable condition.

Kelvin[64]: You see the way we had to think about it was that at the time our baby was nearly dying, and even though you could sense in the doctors' voices that they could see that what we were going through, they had to ask them questions. It was one of the - possibly some of the hardest decisions we'll have to make in our lives.

CS: Are you saying that you would have felt responsible for what happened to him in making these decisions?

Kelvin: I think, me personally, if we'd had made that decision to let them go ahead, and anything did happen, I would have possibly blamed myself, yeah, because the method that they used was tried and tested, but this method that they wanted to use was relatively new, so if anything did have happened, I'd have been, like, we should have stuck with the tried and tested method.

[64] Note that Kelvin talks as if the baby were already delivered at the time of decision-making.

It is important to note here that neither surfactant nor long and short lines are new interventions and neither should have been presented as life-or-death decisions. Kelvin's emphasis on the difficulty of the decision and his description of them as novel interventions may be linked to his anxiety and his negative feelings that his son would be the subject of experimentation. He later expanded on what he felt were simply unacceptable risks.

> If they'd have said we're going to use normal human blood, and possibly put vitamins into the blood, or something like that, then that wouldn't have been a problem, not with humans' blood, but the fact that it was going to be pigs' blood, it don't matter how many times you filter it, no matter how many times you do whatever to it, there's always going to be a chance that something could go wrong, with animals' blood. ... I always remember thinking "oh he's going to get mad cows disease or mad pigs disease or summat." ... If [they] hadn't have mentioned pigs' blood it would have been a big possibility that we would have went ahead with it, but obviously they had an obligation to tell us everything.

He went on to develop the idea of the trial as a risk, feeling confident that they had made the right decision.

> Kelvin: I think if we'd have rushed into it, if we'd just said "OK" and signed, that would have been the worst thing we could have done.
>
> CS: Why do you say that?
>
> Kelvin: Because it was a big decision, I mean, like we were saying, if anything was to happen and we went for this relatively new thing without thinking about it, we dove into it, we were the ones that would have had to suffer.

Although they felt that they had been offered something which was to them unacceptable, they were very positive about the doctors involved in their care. Kelvin felt that they were tolerant of his own suspicion and irritability.

> I think the doctors put it the best way they could, because like I say I was very ratty at the time ... because what I'd got into my head was they were using him as a guinea pig. ... I made it clear that I wasn't happy with it, and the doctors just sat down and had a word with us and said "Look, there's no way in the world we would put him at risk, it's just something being tested at other hospitals and we are just wanting to test it here."

A very important element of their experience was their relationship with the neonatologist who described a trial to them. Gillian felt that he respected the decision that they made. Kelvin described him very positively.

> Very fair, very professional. He could see two people who were still young, still in the wilderness, not knowing what was going on or anything. Gillian was only 17 at the time, and it's a big thing for any couple to go through, but young couples! He took us through the whole procedure, didn't pressurise us at all, spoke to us as if we were [equals] because like sometimes you get doctors who speak down to you, and not realise they're doing it, but this guy was straight on the level, and he says "look, at the end of the day it's your decision, entirely up to you," and then told us all the details.

It may well be that their comfort with the staff involved in discussing the trials, made it easier to make their decision to decline, and to feel positive at a later stage about the choice that they had made.

Shelley and Evan (Int.47)

In Chapter 7 it was shown that fear could push parents to make very rapid decisions to join a trial. It also has the potential to drive parents in the opposite direction, as illustrated by the interview with Shelley and Evan.

Shelley went into early labour at 26 weeks of pregnancy and after observation in her local hospital was transferred by ambulance to another hospital with appropriate neonatal facilities. Her labour stopped and she felt very positive.

> I was fine. The pains had stopped and the contractions were slowing down, so we were like "Okay, this is obviously going to work." Because they'd started to slow down ... [we were] quite cheerful. The midwives were good, ... the ones that were on duty were fine. They would bring us drinks and stuff, and they were jolly, so we were quite mellow, [feeling] "I think we might stop this, and you know, we'll go home and [be] quite happy"

It was at this point that they were approached about the CANDA Trial. The neonatologist who discussed the trial with them initially gave them some idea of the problems that their baby might face if delivered. They repeatedly referred to this conversation throughout the interview, both saying that they were told that their baby "only had a ten percent chance of survival" and that there was a possibility of brain damage. It was a terrible blow to Shelley and Evan who had had not been particularly worried prior to this discussion. For them the description of the various problems that their baby might face, and the suggestion that labour might continue, was devastating.

> Then he come and said that! That was when it all sort of like dawned. Once you knew, deep down that there is the risk of having a baby that early, and all the possibilities of them dying - until they actually said it, we hadn't really, you know, considered it. As far as I was concerned, you know, it was stopping and she was going to be fine.

The neonatologist then went on to describe the CANDA Trial and ask whether they would consider enrolling their baby if delivered. Shelley felt that this was insensitive.

> I think he chose the wrong time to ask us, because he was telling us the worse case scenario and what could happen to her, and then in the next sort of breath he was telling us 'Can we use this new drug?'

The couple instantly and unanimously declined to participate in the trial. Shelley characterised the gist of the conversation as "[the baby] didn't have much chance of survival, and they wanted to try this new procedure out on her." They focused on the experimental nature of research and saw testing drugs on a vulnerable new baby as wholly unacceptable. Evan said:

> I thought, a young baby that wasn't going to have much chance of survival, and they want to use an experimental type procedure! Well, the first thing we thought was "No, no way!"

They stated that they did not feel under any pressure to consent, and that the neonatologist was "fine" about their refusal. They felt that he was "a very good doctor" (Evan) but that he was "very uncomfortable" (Evan), and "very nervous" (Shelley) in his approach to them. Shelley empathised with his position "I wouldn't like to be put in that situation. I wouldn't like to have to go up and ask people that".

Shelley explained that "the midwife came back in after he *[the neonatologist]* was gone, and she was quite a big help in calming us down." Clearly shock and fear were an important part of their immediate reaction, but there were other important elements.

Firstly they felt very alienated by the way that they were approached. They felt that the neonatologist had been insensitive in asking about the trial at that time, but also that they were given insufficient information. Certainly they were not aware of what the trial involved, talking only about "a new thing" and a "new procedure". They were unaware of any link with animals in terms of the origin of the intervention so this was most definitely not part of their concern. It may well have been that the

neonatologist discontinued his approach once he realised that they were unhappy about the research, and Shelley and Evan agreed that this might have been the case. This would have resulted in them receiving only limited information about the trial.

Secondly they were not aware that the trial involved an intervention commonly given to assist babies with breathing problems. They felt that the trial involved new drugs and used the word "experimental" throughout the interview in a way which suggested mistrust of the trial situation.

Thirdly they interpreted the information about the trial in a very particular way which may have been a result of their shock at the thought of experimentation. As they.did not know what the trial intervention was, they simply saw it as something new and threatening. Unlike other parents they did not see it as something that might help their baby but as something that they were being asked to agree to out of altruism. Their interpretation hinged on the potential seriousness of their baby's condition. Evan explained:

> [She] didn't have much chance of survival, and they wanted to try this new procedure out on her. Well just because she didn't have much chance of survival, why would they try this new procedure out!

They both felt that it was precisely because of the likelihood that their baby would die that they were being asked to agree to allow drugs to be tested on her. Evan said: "we were just adamant that it wasn't going to happen!

This last point is very important, especially as it rests on an assumption that other people in their situation might also make. From the interview as a whole however it would seem that the key element in their instant decision to decline the trial was their very intense emotional reaction to the realisation of their predicament. The dynamic of their encounter with the neonatologist was summed up simply by Evan who said: "when he asked us, he had us right at the low point."

Janine (Int.49)

Janine was admitted to hospital at 29 weeks of pregnancy in early labour. She continued to move in and out of labour over a four day period. In a similar situation

to Shelley and Evan, she described her husband as "terrified" by a conversation with a consultant in which there was a discussion of the baby's chances of survival if delivered at that stage. She described herself as "shocked." At a later point during her labour they were approached about the CANDA Trial by a neonatologist. Her accounts of the discussion were very negative and she was clearly still angry about her experience[65]. Janine said that she was given a very brief explanation of the research which she characterised as:

> "I'm doing some research. I need twenty-five babies under thirty weeks to do it. It's about a drug that'll help them breathe. Will you just sign here?" And that was as brief as it was. ... Here it is, just sign, as if that's what I was expected to do.

She was about to comply, to consent quickly without fully understanding the nature of the research, essentially to get the doctor to leave.

> I nearly just sort of went "well yeah, give it here" because you're not thinking. You are just like – "go away!" you know. There's too much going on for someone to bustle in and not really introduce themselves or show any understanding of what you're going through.

Janine said that the midwifery staff were uncomfortable with the situation that they witnessed and they intervened. The neonatologist had not brought an information sheet and the staff asked him to go and find some written details that they could go over with her. Janine described them as "just horrified by the way he'd done it." Although she had initially meant to give her consent, once she discussed the trial with the midwifery staff she subsequently declined to participate in the CANDA Trial. She felt that she had narrowly avoided being "railroaded" into the trial, not in a forceful way but because the trial seemed unimportant.

> I don't want you to think that it was someone who was trying to be false because he wasn't. ... It wasn't forceful it just .... seemed so insignificant. That's probably why I was going to do it. Because it seemed so like, well, this is what you need to

[65] It should be noted that Janine was extremely angry and this is likely to have shaped her account of events and of the conversation with the neonatologist. It was clear in the interview that her emotions were gaining momentum. She became increasingly negative about her care and about other members of staff whom she met in the course of her hospital stay. Her distress is of course a valid emotion but her increasing hostility has resulted in a degree of caution in presenting data from her interview. It may well be that her descriptions, especially reported speech and descriptions of the tone of the neonatologist, are filtered through the very dominant anger that she expressed. Probably the anger resulted from her experience is the most important and instructive finding to have recorded.

> do. That was why I was going to do it, because it didn't seem important. ... [But] it was *so* important!

Janine went on to describe how she came to see the decision as important in terms of the implications which she felt were involved. She did not describe any sense of possible benefits for her baby of taking part, but she did feel that there were significant risks. These risks were linked, as with Gillian and Kelvin, to a somewhat confused model of what the trial involved. She was under the impression that the trial compared a steroid, dexamethasone, to a "pig derivative". This involved risk on two levels. She felt that participation would have meant that her baby could not have had access to dexamethasone, and would have been given the comparative treatment. Essentially the trial would have resulted in "my tiny tiny delicate baby having pig shoved in him". It is most likely that this represents a combination of different conversations about preparations that might be made for a premature birth, the use of antenatal steroids to mature the lungs and administration of surfactant on delivery; this is, however, the model of the trial that Janine based her decision upon. This was a hugely important issue for her as she felt shocked that she had almost placed her baby at risk, not only in terms of exposure to something which she found deeply unsettling, but also in terms of denying him an effective treatment. She said:

> As soon as he was born and I saw that every other baby in the [neonatal] unit was on dexamethasone, it's what made me think I had no doubts whatsoever that I'd done the right thing.

One of the features of this encounter which was particularly alienating for Janine was that she, like Shelley and Evan, had a sense that she and her baby were a means to an end, despite the difficulty of their circumstances. She said that there were "no pleasantries, no nothing" and felt that she was almost "conned".

> I don't think he was concerned at all about my predicament. He just wanted to get my name down on a piece of paper.

Janine described this encounter as "a bad experience with research."

Discussion

The neonatologists involved in the CANDA Trial generally felt that it was not a difficult trial. It compared apparently equivalent safe treatments and it was often thought that it was unlikely to change either parental experiences or the outcome for the babies. The INNOVO Trial, by comparison was far more problematic given the uncertainty which exists over the use of INO, the issue of withholding INO from the control group, and the serious condition of the babies who were trial-eligible.

It is therefore interesting to note that there were many more refusals in the CANDA Trial than in the INNOVO Trial (16% or more versus 6% or more).

The data presented here suggest that for the CANDA Trial, one possibly important factor which may have led to higher refusal rates was that parents could turn down the trial (for whatever reason) without feeling that they were depriving their baby of a potentially valuable treatment. Parents could feel that they were deciding against an add-on piece of research, not an integral part of their baby's care.

This small group of parents who declined to participate in the CANDA Trial were all happy with the decisions that they made, and in part attributed their baby's current condition to the choice not to join the trial. In a setting where parents are acutely aware of how the life and death balance can shift, and where the threat of disability is ever present, they can focus on various elements of care which might subtly or dramatically affect the outcome for their baby and their family. In three of the accounts it was felt that participation in the CANDA Trial would have posed such a threat to a delicately balanced situation which they all felt had finally tipped in their favour. Their decisions to decline participation were given retrospective legitimation as any change to the treatment that their baby had received might not have led to the positive outcome that they experienced. Evan commented " I still think we still made the best decision, because [of] the way she's come out now." Kelvin made a similar statement: "I would refuse it again because it might not put us to where we are now."

The parents made their decisions based on different dominant emotions. For Cilla and Terry they focused on their concern over long-term risks, risks which they felt were

unnecessary given satisfactory alternatives to participation in the CANDA Trial. For Gillian and Kelvin their choice arose out of a sense of distaste for research which they felt could involve the use of pig's blood. Shelley and Evan were clearly shocked and distressed and in no position to think through the issue of trial participation when the option was presented to them, and Janine was disturbed and alienated by her encounter with the neonatologist who offered her the trial.

Despite these differences, there is much common ground in these interviews. It is quite obviously the case that all of the parents felt that they were acting in the best interests of their child, protecting the baby from what they felt were unacceptable risks of one sort or another. In three interviews (Cilla and Terry, Gillian and Kelvin, and Janine) the parents were very suspicious of the use of a product derived from animals. In three cases they were anxious and repelled by the notion of experimentation and they could feel that they and their very vulnerable babies were being used inappropriately (Shelley and Evan, Gillian and Kelvin, and Janine).

There are also very important gaps in the knowledge of most of this small group of interviewees. There were important areas of confusion, with Janine, Gillian and Kelvin mixing details from different elements of care (steroids and surfactant) and different trials (surfactant and feeding lines). In two of these interviews there was a significant sense of discomfort with the way that they were approached and in all three there was hostility to the offer that was made. By comparison Cilla and Terry felt more relaxed about the encounter and the trial, but felt that it was an unnecessary risk to take.

The parents all appreciated the fact that they had not felt under pressure to consent and that their decisions had been accepted by the staff involved. They all stated that had there been a different explanation (Shelley and Evan), a different approach (Janine), or different research conditions (Cilla and Terry, Gillian and Kelvin), they they might have participated in the CANDA Trial. They were all keen to indicate that they had not declined simply because they were negative about research. Gillian and Kelvin, Shelley and Evan, and Janine all however indicated that they had also declined to take part in other research studies during the rest of their baby's hospital stay. This could

suggest that they became sensitive to research after this initial experience, or that they may generally have felt reluctance to join research on their baby's behalf.

For this group of parents questions about the research situation were at the forefront of their decisions. For many of those who accepted trial participation the research was either desirable, acceptable or not an issue. Even where the wider group of parents felt that there were risks they were seen as risks worth taking given the greater background risk of their baby's likely or actual condition. Those parents relied on the neonatal staff to protect their baby and the trial was often incorporated into the dominant therapeutic situation in which they and/or their baby were already receiving care. Those who refused the trial placed it outside of the therapeutic setting in the unsettling realms of experimentation, and the staff involved could be viewed negatively, as insensitive researchers instead of trusted carers. They did not argue that the staff would still have their best interests at heart, or that they were trying to suggest something that might help their situation, as did many of the parents who accepted the trials. As they did not perceive a particular benefit to their baby of trial participation, risks took a more prominent position and the parents took on a defensive role. It is perhaps a sad fact that these distressed parents, although often poorly informed and working with models of the research which were far removed from the CANDA Trial practices, were possibly the clearest in the sample on the fact that the doctors were not actually trying to find a solution to their individual problems, but were conducting research for which they wanted their assistance.

Chapter 9 –Attitudes of doctors and parents to trial-related perinatal post-mortem pathology studies

Perinatal post mortems - a second trial-related decision point for professionals and parents

The decisions that the neonatologists and the parents made about trial enrolment could relate to the opportunity to contribute to research and to the potential value or costs for individuals. These were not however consistent or equally weighted factors.

There were important differences between the setting and conditions of the trials which affected the neonatologists' views, and the balance of these factors could shift on a case by case basis. Although some felt that the CANDA Trial offered few likely benefits to individuals, the value for medical science and low associated risk made the offer of enrolment generally acceptable. This could change for those parents for whom the neonatologists felt that that an approach would impose unacceptable stress factors, namely the need to listen to information and to make a decision at a difficult time.

For the INNOVO Trial the possibility for risk was generally thought to be higher, and the introduction of additional stress factors into even some of the most extreme parental situations was justified because the potential for personal gain existed. In such circumstances scientific gain was never presented by the neonatologists as a driving force in the decision to raise the subject of the trial with parents.

For the parents trials were acceptable because they were thought to involve little or no risk, or the risks were counterbalanced or outweighed by the possibility, however slim, that their baby may benefit. For the INNOVO Trial the parents rarely felt that an approach to discuss the trial had been at too great a cost, the notable exceptions being Erica and Howard whose baby died shortly after allocation to INO.

A similar process of balancing possible costs, risks and benefits can occur at a subsequent and even more difficult point in the trial situation. Where there are high mortality rates associated with the underlying condition of trial participants, postmortem (PM) pathology studies can be an essential element of the trial enquiry. The INNOVO Trial had a PM protocol and specific organ studies (heart, lungs and brain). The CANDA Trial had no PM pathology study, but where PMs took place information from lung tissue was used to supplement trial findings. The aim of such studies is to gain an understanding of any possible positive or negative impacts an intervention has had on those who have died. An assessment of differences between the pathology of those allocated to different trial arms is as much a part of the drive to understand the effects of an intervention as the processes of testing and follow-up for those who survive. Where babies who were enrolled in a trial go on to die, parents can be asked to consider permitting a PM to contribute to trial-related pathology studies. The trial procedures at this point are of little, if any, benefit to the parents and there may be associated emotional costs. The benefits which might be accrued by the collection of trial-related PM pathology samples are predominantly for medical science.

The trials could therefore involve two decision points for neonatologists and parents. The extent to which their decisions about PM pathology studies involve a similar balancing of cost and benefit as was demonstrated at the point of enrolment, is considered below. Part I gives details of the PM rates for the two trials in the NICUs included in this study. Part II describes the views of the neonatologists and Part III describes the views of a small number of bereaved parents.

Part I - PM rates in the two trials

The heads of the NICUs in this study all stated that it was their usual practice to offer all bereaved parents a PM on clinical grounds. In theory, therefore, all bereaved parents of babies enrolled in the CANDA or INNOVO Trial could have been offered a PM irrespective of their inclusion in a trial. The consultation for these parents may or may not have included discussion of the use of PM material for trial purposes.

Given the fact that the INNOVO Trial involved extremely sick babies, a high mortality rate was expected. It was acknowledged in the trial pathology study protocol that "perhaps the biggest challenge for the pathology study is ensuring that the majority of those babies in the trial are included in the study." Indeed almost half of the babies died (80/168 - 48%), but very few PMs were carried out.

Postmortems were carried out for 27 of the 80 babies who died (34%) as shown in Table 14. This was more likely for term babies (10 out of 15 cases - 67%), than for preterm babies (17 out of 65 cases - 26%). In the four INNOVO NICUs in this study there were 15 PMs, that is 31% of the 48 that died in these centres and 56% of the total number for the trial. Two of the NICUs had higher PM rates than the trial generally and two had lower. This is not accounted for by a skew towards recruiting more term babies for whom a PM was more likely. For instance NICUs B and D recruited similar numbers of babies but B recruited slightly more preterm babies. The mortality rate for Centre B is however far higher, suggesting that the profile of the babies recruited to the trial from this NICU may be sicker than those at NICU D. The two NICUs with the highest mortalities have the lowest PM rates (B and C).

	Pre-term	Died	PM	Term	Died	PM	Total babies	Total died	Total PM
A	5	1	1 (100%)	2	1	1 (100%)	7	2 (29%)	2 (100%) [66]
B	23	19	2 (11%)	12	6	2 (33%)	35	25 (71%)	4 (16%)
C	11	8	2 (25%)	--	--	--	11	8 (73%)	2 (25%)
D	19	11	5 (45%)	12	2	2 (100%)	31	13 (42%)	7 (54%)
A-D Total	**58**	**39**	**10 (26%)**	**26**	**9**	**5 (56%)**	**84**	**48 (57%)**	**15 (31%)**
Trial total	108	15	10 (67%)	60	65	17 (26%)	168	80 (48%)	27 (34%)

Table 14. PM rates for the INNOVO Trial

The CANDA Trial involved only preterm babies and PM rates were higher than for the INNOVO Trial. Of the 199 recruits whose data were analysed in the trial, 45 died and 17 underwent PMs (45%). There were some large differences between the NICUs

[66] The 100% PM rate for NICU A is uninformative given the small number of deaths.

that collaborated with this study, with NICU C carrying out far more PMs than the others, and many more than were conducted for the INNOVO Trial. The figures for each NICU are shown in Table 15. The PM rates in NICUs C and D are reversed for the two trials.

	Total babies	Total died	Total PM
B	2	0	--
C	44	12	9 (75%)
D	83	17	5 (29%)
E	30	9	3 (33%)
B-E total	**159**	**38**	**16 (42%)**
Trial total	199	45	17(45%)

Table 15. PM rates for the CANDA Trial

These very variable figures reflect the difficulties highlighted in the literature and anticipated by the INNOVO Pathology Study team. Whilst PM rates in NICU C for the CANDA Trial approached the recommended level of 75%, (Joint Working Party of Representatives from the Royal College of Surgeons, 1991) overall they are generally low. Even where PMs were carried out, it did not necessarily follow that tissue was contributed to trial pathology studies. It was in fact the case that the INNOVO Trial pathology studies were discontinued due to insufficient material for analysis. The interviews with the neonatologists and parents shed some light on possible reasons for these lower rates, and the problems associated for those involved.

Part II - Views of the neonatologists

Although the neonatologists were interviewed primarily because of an association with the INNOVO or CANDA trials, PMs generally raise salient issues for their profession. They were therefore in a position to reflect on the need for pathology investigations within and without the trial context. They were asked whether trial enrolment affected their approach to parents. Responses reflected the responsibility they felt to the trial, to parents, and how they viewed the impact of the approach. Their views on how consent in this situation should be managed are also presented.

Responsibility to parents and to the trial (care and research)

The neonatologists articulated varying degrees of responsibility to contribute to trial PM pathology studies, which appeared to be determined by their knowledge of trials and their allegiance to parents. They varied in familiarity with PM processes both generally and for the INNOVO and CANDA trials. Most consultants were knowledgeable about requirements and described alternatives such as limited PMs where parents are uncomfortable with certain procedures. Their views of their duties to parents and to the trial (care and research) suggested a sense of responsibility which was (i) equal, (ii) divided or (iii) prioritised.

A sense of equal responsibility

Neonatologists with a sense of equal responsibility saw their contributions to trial-based pathology studies as important, and felt that they can be compatible with the needs of families. Some described a moral responsibility to contribute to such studies, with a consultant arguing that he feels "mandated" to do so (Int.16 consultant). Those who talked very positively of the role of PMs in a trial context, also felt that they were of great value in a purely clinical sense. A consultant explained how he approached all parents where possible but where babies were enrolled in a trial he felt a degree of self-imposed pressure to secure consent. Not conducting a PM would be an "opportunity lost". He said:

> I feel even more of an imperative to try to get postmortem tissue within the trial context. I'm fairly keen to get postmortems with trials wherever we can anyway. ... I do feel, particularly for experimental agents such as nitric oxide, that we should have postmortems wherever possible, partly to reassure parents that it wasn't the drug, if we *can* reassure them it wasn't the drug that caused the death, ... but partly also if you learn stuff from histology that we're not learning from the clinical data, that may make a difference to how long the trial runs. (Int.2 consultant)

These neonatologists felt they could combine what they saw as their duties to individuals with duties to the wider community.

A sense of divided responsibility

Some neonatologists described with some anxiety, their feelings of responsibility to research, as well as to families in their care. They demonstrated some doubt over whether the two could be served by inclusion in PM studies. For some there was great tension between the ideal of contributing to research whilst also providing care. With the knowledge that neonatal trials aim to improve care, one neonatologist described a moral pressure to gain consent for a PM. He foresaw a potential conflict of interests between individuals and the wider community.

> There would be some pressure on the person requesting the autopsy, that they do so for the benefit of the trial and prospective future babies who might be enrolled in that trial. ... [If] it was causing problems and causing deaths then it clearly would be to everyone's advantage to find out that early. You have to balance that against the parents' wishes to not have an autopsy. (Int.18 registrar)

The sense of an external pressure was, for a small number of neonatologists, a significant issue. Whilst intellectually they felt that PMs were important, and that trial collaboration carried with it a responsibility to explore the possible impact of trial interventions, practically and emotionally the shift from providing care in a clinical context to conducting research could cause great problems. Where possible tensions exist between the academic benefits of a PM for a trial and the difficulties for parents, their position could become untenable. A registrar described how a difficult situation can arise.

> [Normally] if you say to parents, "Can we do a postmortem?" and they say no, you say, "Well, OK." Whereas ... you're under a little bit more pressure 'cos you're in a study to actually then push them a little bit harder and say, "Look, we really do need this, this will help other babies." They say, "Look, I've already helped other babies [by being] in the study to start with, now you're asking me to ... chop my baby up into lots of different bits, I just want his pain to end." ... You nearly always back down and think, well they've got a point there. (Int.26)

A prioritised sense of responsibility

Some expressed views in which parental needs were prioritised and responsibility to trials was attributed varying degrees of importance. Neonatologists could see trial-

related PMs as important but very much secondary to parental needs, as unimportant, or as a potentially inflammatory issue which they were simply not prepared to consider.

A consultant indicated that he aims to offer trial-related PMs but was adamant that there be no further discussion once parents indicate their choice. He argued that this was the only way to manage consent given recent concerns about retention of organs at Alder Hey, and the issues raised over consent for the CNEP Trial[67].

> In the current climate we have to discuss [research requirements] in full with parents and if they say no, they say no, end of story. [L]ooking after the family comes way before the trial. (Int.14)

Some neonatologists described PMs only in terms of the individual for whom they had clinical responsibilities, and were unaware of their trial-related value. They had not considered a role other than to ascertain cause of death and argued that trial enrolment made no difference to consent. Registrars were often unfamiliar with the pathology elements of the trial. This may not be surprising given the various career stages of the interviewees and different levels of exposure to consent for PMs which tend to be handled by senior staff. The younger and less senior neonatologists were however often responsible for initial trial recruitment and it might be argued that awareness of the trial requirements should be expected of those with this role. Few of the younger doctors had considered that trial participation might change the importance of a PM, the grounds upon which it is required, or the information that may be requested by parents. A striking element in the data was the lack of a connection between the trial and a subsequent PM. This was particularly clear where four neonatologists who had recruited to the INNOVO Trial, including a consultant, were unaware of the Pathology Study until it was mentioned in interview. One was technically aware but had not connected this information with the need to initiate any trial-related procedures when parents consent to a PM.

> I hadn't particularly thought about it to be honest. ... In the back of my mind I knew that as part of the INNOVO protocol they were looking at some postmortem specimens but ... I've never thought of that when I'm getting consent for a

[67] As discussed in Chapter 3.

postmortem. ... But it is covered by the consent form and the consent that we get. (Int.27 registrar)

I don't think it's something that we ever really thought about until Liverpool and Bristol. ... I certainly think it probably will colour the way people are now going to ask for postmortems, and I suspect that people will ask for them less and less. Because you think, the parents are going to ask, "Are they going to take this out, are they going to do that?" and you don't know. ... I suddenly thought, well actually, I never really think about what the pathologists do, and you're the one who's talking to the parents, so when they find out subsequently that this is what's happened it makes your relationships ... with them difficult because they would see you as somebody who's not given them all the information. [That] isn't necessarily something that you did purposely, you were just probably unaware that that's what happened. (Int.4 registrar)

Some neonatologists indicated that the inherent difficulties were so problematic that they had chosen to opt out of neonatal trial-related pathology studies altogether. One consultant argued outside of his interview that since the problems with consent for PMs at Alder Hey, and for the CNEP Trial he would be reluctant to ask parents for a trial-related PM. He also doubted whether any of his colleagues would do so. Another consultant commented that consent for a PM for neonatal RCT purposes "wouldn't be top of my priorities" (Int.23).

The impact of the approach

The neonatologists were very concerned about the possible emotional impact of any approach to parents and the possibility that parents would feel subject to a degree of pressure.

PMs could be requested purely for trial purposes

Over and above the rather obvious statement that consent for a PM is sought at a stressful time, an important issue which was frequently raised was the difficulty in asking for a PM when it already seemed to be clear why a baby had died. If there is no query over cause of death, but a baby could be included in a neonatal PM pathology study, essentially newly bereaved parents could be asked to permit a PM for purely altruistic reasons. For some this was simply asking too much of parents; it was an inappropriate request which would achieve little. A registrar argued that PMs

generally are not so useful, stating that "nine out of ten of postmortems ... [are] quite unnecessary because we know exactly why they died." (Int.24). Some neonatologists saw it as appropriate to make such a request, albeit with great caution, some saw the value of data but viewed it as inappropriate to make this request, and some saw it as unnecessary, particularly for preterm babies where much is known about causes of death. One consultant felt that few neonatologists would be enthusiastic about approaching parents in such circumstances. This is borne out by low PM rates for preterm babies as compared to the term babies in the INNOVO Trial (26% preterm underwent a PM versus 67% term). The CANDA Trial PM rate was 45% (all preterm). A registrar commented:

> [P]ostmortems are of very limited value. You usually know why a baby has died. So ... why cut them up. If you don't know why a baby has died then it's perfectly valid ... but if you've got a prem baby ... I think that the parents might well think that you're pushing it because of the trial. (Int.24)

Such concerns provide a backdrop to the request for samples for research purposes. Where clinicians are uncomfortable, as for preterm babies where they feel a PM has little to offer parents, there are clear difficulties in making this request. This point was made by a registrar who was very well informed and had thought through his own concerns. He argued that it was far more discomforting for him to ask for a PM for a trial rather than purely on clinical grounds.

> [I]n a conventional postmortem you restrict the area to somewhere you're unsure [e.g.] the cause of death ... [T]he problem with ... INNOVO [is] that even in babies who died of something completely different ... or we know the cause of death, their brain and a chunk of their lungs and a chunk of their heart are going to go to different areas of the country, and the baby's going to be buried without those organs ... [T]here are lots of issues around that I do feel a bit uncomfortable with. (Int.26)

Concerns over causing distress and the application of pressure

Regardless of where doctors saw their responsibilities, they were concerned that bereaved parents should not be pressured to consent to a potentially disturbing procedure. There was also concern that requesting a PM for the benefit of others might be construed as "emotional blackmail" or "a bit callous". It might also suggest

to parents that their baby may have been harmed as a result of their decision to join a trial.

> [I]t's almost unfair to suggest to them that there's more of a reason to do a postmortem on their baby than another baby who wasn't part of the trial. [It] ... might suggest that there might be something that the trial did that we need to find out. (Int.13 registrar)

Neonatologists commonly said that they back down as soon as they sense parental discomfort. One said that when he realises that parents are going to decline, he does not feel that it is "appropriate in any way to push beyond that." He felt that dropping the subject very quickly eased his own situation.

> I never felt under pressure to get parents to consent to a postmortem, in fact quite the opposite. If the family didn't want [one] we really left it very rapidly. (Int.10 registrar)

The concerns that the neonatologists expressed indicated that they often felt that the discussions that they had with parents could be very disconcerting and this may be why they often take a tentative approach. Department of Health guidelines state that consent forms should involve decisions about which body parts may be studied, what may or may not be retained, how body parts should be disposed of and whether samples may be used for research purposes (Department of Health 2003). Whilst some saw detailed information-giving as appropriate, others felt it marked a shift to a more defensive professional position and placed too great a burden on parents. One neonatalogist described it as "absolutely ridiculous" and "not fair on the parents" (Int.12 registrar); another asked "how brutal do you really want to be with bereaved parents?" (Int.9 registrar). A senior consultant said:

> We have a consent form that's actually talked about removal of the brain ... it's been written down explicitly. And now this is obviously making it even more explicit for every single bit. [T]here's no question at all, it becomes uncomfortable. Because on the one hand you are trying to support the parents at a terrible time and on the other hand you are ... [asking] them to do something very horrible to their [baby]. I can see myself refusing postmortem too. (Int.19)

It is important to note that this consultant had not, however, lost faith in the consent process, which he valued highly.

> On the one hand it's much more uncomfortable for them having to think through that at a time when they're very distressed but on the other hand they're more informed and they've made a clear and informed choice. So it has to be better, I'm in absolutely no doubt at all about that. (Int.19 consultant)

Part III - Views of the bereaved parents

There were 10 available interviews for analysis, involving 16 parents (10 mothers, 6 fathers), 7 for the INNOVO Trial and 3 for the CANDA Trial. In three cases a PM was not conducted, in five cases the parents agreed to a PM. In two cases information is not available. These details are linked to parental pseudonyms in Table 16.

The parental reactions to the subject of PMs were explored after the analysis of the neonatologists' data and so it was possible to consider whether or not they felt discomforted and under pressured. Of particular interest was whether they articulated any sense of connection between the trial and a PM.

Trial	Int	Pseudonyms	Allocation	Outcome	PM?
CANDA	52	Tape corrupted		Died	-
	53	Mona (& Daniel)	Curosurf	Died	No
	57	Cathy & Kevin	Curosurf	Died	Yes
	59	Linda & Douglas	ALEC ALEC Curosurf	Triplet 1 D CANDA Triplet 2 D CANDA Triplet 3 D CANDA	Yes Yes Yes
INNOVO	74	Cheryl	INO	Died	Yes
	75	Carly & Peter	Control arm Not applicable	Twin 1 D INNOVO Twin 2 S not INNOVO	?
	76	Belinda	INO Not applicable	Twin 1 D INNOVO Twin 2 D not INNOVO	No
	77	Heather & Jeremy	Control arm	Died	No
	78	Lorraine	Control arm	Died	?
	79	Judith & Sean	INO	Died	Yes
	80	Erica & Howard	INO	Died	Yes

Table 16. Pseudonyms, interview and PM details for the bereaved parents

Reaction to the offer of a PM

There were no particularly negative parental accounts of discussions with neonatologists on the subject of a PM for their baby. One mother did, however, feel a degree of pressure. One of Belinda's twins was enrolled in the INNOVO Trial. She felt that it was clear why her babies had died, having been delivered at 24 weeks of pregnancy at very low birth weights, but that there was some doubt remaining about one particular aspect of their case:

> Sally had a hole in her heart and they wanted to see whether there would be a risk to any future pregnancies, [and] there was a suspicion ... that there was something wrong with Charlotte's heart in terms of how it was pumping blood around her body.

They were asked if they would consider PMs and wanted to think the issue over. The consultant telephoned them at home for their decision. Belinda was clear that she did not view the neonatologist negatively and reported that he specifically said that he did not wish to pressure them, but she commented:

> I must admit I didn't feel comfortable saying no to him. I remember thinking at the time that - I don't know if it was his manner, but I just felt like a postmortem would be more for him than it would be for us, and I just wasn't prepared to do it. (Belinda Int.76)

Although she knew that there was the possibility that PMs would provide them with useful information, she found the idea very difficult as her babies were "like dolls". Belinda was clear that this request was not made in connection with the INNOVO Trial. It is of course possible that had the parents agreed to the PMs on clinical grounds, then the consultant may have raised the subject of contributing tissue for Pathology Studies.

The desire not to pressurise may have led to very limited discussions, leaving parents feeling that a PM was irrelevant in their case. Heather and Jeremy stated that in discussing the possibility of a PM, there was no mention of enrolment in the INNOVO Trial, and that their consultant viewed a PM as unnecessary.

> [A postmortem] was brought up as an option and I think [the doctor], without wishing to put words in our mouths said as far as they could see [he] was born premature and there was nothing really wrong with him ... Maybe he was hinting that they wouldn't actually find anything out that they didn't really already know and really that [was] coupled with the fact [that] he'd had more than enough done to, to him. (Jeremy Int.77)

These parents felt that they were being spared the stress of deciding about a PM. They said they appreciated being guided by a "particularly outstanding" neonatologist who had eased the situation for them. Heather commented that they "didn't feel pressured at all either way." They were asked whether they had had any discussion of the INNOVO Trial in connection with a PM and both were clear that they had not.

Appreciation of the connection between PM pathology studies and the trial

Four couples had made a connection between the trial and a PM. In three cases the parents agreed. Cathy and Kevin sought out a PM, raising the subject with their baby's consultant. This was part of their strong desire to understand their baby's death and to make sense of events. They wanted to know whether inclusion in the trial could have contributed to his death, and in this regard they felt the PM results had been reassuring. The generation of valuable scientific information was also an important coping strategy for both parents.

> It's getting the positive from the negative because a baby's death becomes a very negative thing. ...When it's a prem baby, they don't make a noise, they don't open their eyes, so you never see the colour of their eyes. The only thing you've got is that touch ... The only events that you remember are painful events so that's why ... you have to start getting positives. And the positive for us was that, number one we may have got an answer but number two that somebody else may gain from that.

They had a very generalised sense of contributing to medical research. They stated that their aim was not particularly to add to the CANDA Trial, but to make a broader contribution.

> There were two reasons behind it, ... the need to know for [the baby's] sake [and] for our sake, and also it's for medical research and that wasn't just because

> of this trial. ... The more information that people can gather, if they can use that and therefore if they gain something from the postmortem that might help another baby that was in that situation, or could be in that situation in time to come [then] ... with any luck they might have got the information. They may have got some information back for the trial. I don't know if they did but at least it answered the question that it was nothing to do with that that had caused his demise. (Cathy Int.57)

Another couple, Judith and Sean, whose baby was enrolled in the INNOVO Trial also articulated altruism but specifically in terms of the trial. They felt that the discussion about a PM was "handled well". Judith initially felt very uncomfortable whilst Sean was prepared to go ahead. Although at first she was "adamant" that she would not permit a PM, Judith came to feel that there would be certain benefits in clarifying the cause of death for themselves, and as a contribution for others.

> [W]e agreed ... because even though it [nitric oxide] didn't work for us, if they could get anything from it that would help other people then it was worth it.

Sean explained how they came to view the PM as valuable, with a direct connection made in his account to the trial.

> [We felt that] he's had this trial and they might as well get what information they can about it. You know at least he hadn't gone to waste then. (Judith & Sean Int.79)

Parents of two babies appeared to have considered a PM on purely altruistic grounds. Mona, whose baby was enrolled in the CANDA Trial, said "if it'll help somebody else later on then I'm fine" (Int.53). Her partner however subsequently refused and because of this the PM did not take place. Another mother, Cheryl, whose baby was enrolled in the INNOVO Trial, discussed the possibility of a PM with her baby's consultant. Her account indicates that although she reversed her initial decision and agreed to a PM, she did not feel under pressure to do so.

> [H]e asked if they could do an autopsy and I said no, and then he says "well she's been on a trial and it would help". I says "well if it's going to help another baby ... yeah, you can do it". He says 'we're just going to take part of her lung away, just to see what it was" and I said "Okay then."

Thereafter her story involves the type of experiences which can, understandably, make neonatologists nervous of approaching parents. It also highlight some of the ways in which gaps in parental knowledge or understanding about the nature of PMs, however those gaps come about, can have deleterious effects. Cheryl wanted to bring her daughter home before the funeral but there was a delay because of the PM. After three days she called the neonatologist saying "I'm [doing] this as a favour to you, but I want her home". When the baby was returned to her she was distressed when she found an expected incision in the head.

> I'd dressed her [in a] little dress and a hat [but] they put her hat on back to front, so I took [it] off and they'd gone into her head and I didn't know. And it was just horrible. ... I'm annoyed that they didn't say that they were going to go in. I didn't know and I did say to [the doctor] when I went back in, ... "when you say they're going to have an autopsy, I think you should tell them that you're going to go into their head" because that has stayed with me and that's a sight that will never ever leave me. (Cheryl Int.74)

For Cheryl there was a sense that something quite inexplicable had happened. She could see no reason why it was necessary to have carried out an examination of the brain. Whether or not she was told of the various elements of the PM cannot be determined. What is clear is that she did not *feel* that she had been informed of this detail and was subsequently confronted with the reality of a PM in a shocking and brutal way. She was asked if it might have helped to have written information about what was going to happen, and she felt that it would. Despite this experience, she spoke very positively of the neonatologist, saying "I got on really well with him."

Discussion

It was very clear that for the neonatologists and the parents the possibility of conducting PMs for babies who have died in such traumatic circumstances was not an easy subject.

The neonatologists sometimes felt that they themselves were vulnerable in what are precarious political circumstances. As professionals they can be exposed to a degree of risk in a threatening environment where consent is the focus of much media

attention and social scrutiny; choosing to stand outside research-related pathology studies may be part of that. The new consent forms may also affect the likelihood of parents being offered a PM, although a recent survey (Rose et al 2005) suggests that only 8% of those not approaching parents gave the forms as the reason. In fact the biggest single reason (35%) was that a perinatal pathologist was unavailable.

Some neonatologists were positive about pathology studies and felt that the information derived from PMs offered a degree of protection to babies who could be exposed to a particular intervention in the future should it prove to be harmful. This was however to be weighed against a sense of responsibility to current bereaved parents. There was a very strong sense that the neonatologists felt that the offer of a PM could be very stressful for parents who were seen as wanting to protect their babies from further interventions and mutilation. They were also thought to need protection from unpleasant details of PM procedures, from the stress engendered by decision-making, and in particular from any sense of pressure. It is therefore not particularly surprising to find that the neonatologists were cautious in dealing with bereaved parents. There is however a consequence of the speed with which the neonatologists could discontinue their approach as parents may be less likely to be told how a PM might be of value to a trial. They cannot therefore be said to have given an informed refusal to their participation in this element of the research.

Another and very important response to this difficult situation is to present the subject of trial-related PMs in only selected cases and in what some of the neonatologists felt were less discomforting terms. When a baby is alive, its best interests are quite clearly the central concern of the neonatologist. Once a baby has died, the request for samples for research purposes makes explicit a research role explicit. Whilst for some neonatologists this was simply not an issue as they felt comfortable in their combined roles of researcher and clinician, many seemed to be at greater ease when linking a request for a PM to clinical rather than research reasons. Crucially this allowed them to realign themselves as carer rather than a researcher, a discomforting role at this particular juncture. This does however mean that in cases where there is no clinical

indication for a PM, for instance the particularly preterm babies, contribution to a trial-related pathology study may be unlikely[68].

The parental interviews provide support for this careful approach, but also suggest that it may be possible to approach more parents without undermining their wellbeing. The parents demonstrate the variety of reactions to PMs that one would expect to see, from those who did not want any further intervention to others who felt that they needed the information from the examination. Within these two extremes there were parents who were initially discomforted but who then decided to go ahead. Parents who elected to have a PM did so for their own needs, or to contribute to a trial, or for both reasons. It is reassuring that the fact that the subject was raised was generally not seen as inappropriate and none stated that they were pressured into a decision.

The data also suggest that for some parents the caution and selectivity exercised by the neonatologists may not be wholly appropriate. If bereaved parents are not given information about the research value of PMs they may be denied the chance to make their own decision about contributing to research. This type of research may in fact be highly valued by some parents who have been affected by neonatal loss, as was the case for Gina and Matt whose views were described in Chapter 7. From the interviews with parents here and in the ECMO studies, it seems that neonatal research is often highly valued. Parents can be keen to make a contribution and often express this in interview. Whether or not this may extend to the larger group of bereaved parents, and would be applied to pathology studies, cannot as yet be answered. It would seem, however, that this small amount of data provided some evidence that some bereaved parents may support the idea of contributing to research through a PM. The specific context of a trial may make their contribution more concrete than an abstract notion that a PM may contribute to knowledge in some general way.

A major difficulty in this area is the way in which parental emotions and professional sensitivities converge and to some extent obscure the point where care ends and research starts. Where the two overlap this appears to cause additional difficulty,

---

[68] In anticipation of poor participation rates, there may well be a shift towards excluding pathology studies from trials, as has happened at a leading UK perinatal trials centre (personal communication, Peter Brocklehurst, Director of the National Perinatal Epidemiology Unit).

possibly because the rules and roles involved can be imprecise. This problem arises at both the initial point of enrolment in a trial, and for some at this endpoint where PMs might be considered. The two decision-points are linked, occurring at different points in a linear process. The circumstances are, however, very different and in practice have become rather disconnected. This can mean that some of the neonatologists who are willing to recruit to trials can be reluctant to recruit into trial-related pathology studies; parents who were prepared to enrol their baby in research probably vary as to whether they continue to feel a connection with a trial after their baby's death. Whilst the parents who consent out of a wish to contribute to research may not be typical, their views may be shared by others who were not given the option of a PM. Undoubtedly there are those who would find the request very difficult. The difficulty for neonatologists is working out who will be receptive to research and who will be disturbed, a minefield they tread with understandable caution.

Chapter 10 – Discussion and conclusions

The aim of this thesis was to improve understanding of the decisions that clinicians and parents make about collaboration, participation and non-participation in neonatal trials, and to add to the existing theoretical literature which deals with the conduct of randomised controlled trials.

The theoretical literature is substantial and can be divided into two approaches, described in this thesis as the Theory of Broad Benefit and the Theory of Limited Benefit. In the former, the dominant image is of ethical balance; trials are considered to be the moral response to prevailing conditions of uncertainty, offering potential for benefit to individuals and society, and minimizing the chances of harm through controlled conditions. In the latter, the dominant image is of competition, with concern that the needs of research can be met at a cost to individual trial participants.

The available empirical literature is also large and wide ranging. There are, however, certain limitations in much of the data produced. Many studies have focused on decisions which relate to trials in principle. Whilst this has a certain value, it is only one part of the way that people think about trials. Stripped of context, generalised accounts of decision-making may or may not relate to the decisions that are made in practice about individual trials.

The value of this research

The research reported here explored the context of decision-making from two different perspectives (clinicians and parents). Unusually, it was comparative in nature and involved a substantial number of interviews. It was conducted over an extended period which allowed close examination of two trials across time. Although there are studies which have involved both professionals and those offered trial participation (Joffe et al 2001; Mason et al 2000) this appears to be the only available qualitative research which explicitly grounds decisions within a dyadic structure, exploring the attitudes and experiences of each of the parties in detail and in relation to each other.

It is through the detail that an understanding of the background as well as the foreground of the decisions was possible.

It was suggested early in this thesis that research which seeks to present a list of causal factors for decisions about trial collaboration and participation may underplay key ways in which people act in relation to trials. This seems to be supported by this research which has shown for instance that clinicians do not make decisions in isolation but in as part of a complicated local collective system. For the parents their often rapid choice to participate could be almost independent of the conditions of the research that they were asked to consider. Instead of weighing key elements of the research, such as risk, many focused directly on the potential of an intervention to benefit their baby. The therapeutic misconception which was present in many of the parental interviews, may have had its roots in the therapeutic orientation of many clinicians which was also identified. This research highlights the extraordinary complexity of interrelated factors which shape the decisions made by clinicans and parents.

The key points which emerged from this study are summarised in Boxes 12 and 13.

Key Points – neonatologists

- Trials could be viewed on a number of levels, in principle, in practice, collectively and individually
- An intermediate level of equipoise, "local equipoise" was identified in the collaborating NICUs
- Collegiate and hierarchical elements of decisions about collaboration were observed
- A therapeutic orientation existed for one trial but not the other suggesting a relationship between different research conditions and the balancing of duties to care and research. It also suggests that, rather than treating all trials as a single entity (trials in principle), the neonatologists are discriminating
- Decisions to suspend collaboration (for groups or individuals) did not undermine commitment to a trial or to a broader sense of equipoise
- Decisions to suspend collaboration could relate to strategic thinking about care in the context of research
- The disconnect between the initial decision about enrolment in a trial and a possible subsequent decision regarding a trial-related PM is guided by the therapist-led principle of non-maleficence

Box 12 - Key Points to have emerged from the interviews with the neonatologists

Key Points – parents
• The context of parental vulnerability and stress have a direct impact upon decision-making • The therapeutic misconception was present in many of the parental accounts, including parents in the CANDA Trial • Parents who tolerated being approached about research even in the most difficult of situations, often saw the trials in therapeutic terms. Parents who did not see the trials in therapeutic terms could be less tolerant. • The vast majority of the decisions were made very rapidly even if more time was available • Perception of risk was independent of the trial under consideration and did not affect the direction of the decisions, but was associated with slower decisions • There was a significant degree of support for research amongst parents which may extend to consideration of contribution to trial-related PM pathology studies.

Box 13 - Key Points to have emerged from the interviews with the parents

The contribution of this research to current debates

These key points feed directly into a number of live debates about aspects of research and care, three of which are considered below. They are:

- Equipoise and responsibility for the decision to collaborate
- Clinician orientation in relation to care and research
- The influence of recruitment in extreme circumstances on the development of the therapeutic misconception

Equipoise and responsibility for the decision to collaborate

The ethical underpinning for research and randomisation is widely agreed to be provided by equipoise. It is seen to operate at two levels, at the larger clinical community level known as "clinical equipoise", or at the level of the individual, known as "personal" or "individual equipoise". In this study it was shown that prior to agreeing to collaborate with a trial, clinical equipoise was carefully considered by senior representatives within each NICU who define the position that will be taken within their local setting. This was not simply a pronouncement that the individual

equipoise of one person, for instance the Head of Department or the potential Local Principal Investigator, should stand for an entire NICU; nor was it a rubber-stamping of clinical equipoise. It was a process by which evidence put forward in a trial protocol was considered in relation to the views of local experts and with reference to local considerations. Formal or informal modifications to protocols could be made to ensure that trials fit with local approaches to care. This process of assessment and refinement effectively sets local standards for equipoise and ethical practice. It has two effects which are relevant to broader clinical research situations.

Firstly, if this finding is replicated in other settings, it would suggest that another, far more subtle but influential, intermediate level of equipoise exists which might be termed 'local equipoise.' Local equipoise bridges the existing concepts of clinical or community equipoise and individual equipoise by taking into account the relationship of individual clinicians to the systems in which they operate, which shape and direct the choices that they make. The establishment of local equipoise by local clinicians is in part based on their interpretation of the scientific evidence, but is also firmly grounded in the need to work with a local population of patients in a local setting. An example which illustrates this point is the potential advantage that the slower-acting surfactant, ALEC, could offer a NICU which frequently had to deal with long transport situations. Here rapidly induced changes in a vulnerable baby could introduce additional risk into an already delicate situation. Such an issue might not be factored into the equipoise equation for a trial generally, but could have a direct bearing on effectiveness and safety in the local situation.

Secondly local equipoise may provide a more realistic picture of the ways in which less senior staff operate within collaborating trial centres. To some extent they are expected to comply with a higher-level (here consultant-led) decision to collaborate and it is not, therefore, always clear that non-consultants actually made personal decisions to become trial collaborators. In some instances it was clear that the personal equipoise of less senior staff had less bearing on decisions about recruitment than those of their senior colleagues. There was often a sense in the interviews that the neonatologists were explaining "what we do here" rather than "what I do". Where collaboration is based upon local equipoise this involves a degree of trust, (as does parental co-operation with a trial), that the decision made by senior colleagues

indicate that a trial is ethical and scientifically justified. It also brings the less senior staff a degree of security and protection from the weight of personal decision-making about collaboration in difficult circumstances. Thus for staff who are not in a position to assess community equipoise, as they are unfamiliar with trials, with an intervention or are insufficiently experienced to judge the quality of the relevant evidence, local equipoise stands in for community equipoise.

When individual equipoise was considered, it was shown to be highly context-dependent. For the CANDA Trial individual equipoise appeared to be consistent with collective equipoise and was a stable and widely stated position; for the INNOVO Trial it was a labile, multi-tiered state. It was not particularly surprising to find that equipoise could shift for individuals over time with growing experience with an intervention or as the weight of research evidence increased; this phenomenon has been discussed on several occasions (Hellman 1979; Schafer 1982; Hellman & Hellman 1991). It was however interesting to see how, for the INNOVO Trial, it was a state which could change according to perceptions of the need for INO of individual trial-eligible babies, babies for whom community equipoise indicated that it was unclear whether INO would be helpful, harmful or ineffective. Whilst the neonatologists could feel that they were in equipoise, as their view of the clinical needs of a deteriorating patient increased, so did the potential value of INO. Eventually perceptions of escalating need could tip the balance sufficiently that equipoise no longer existed for an individual clinician for an individual case. In these circumstances either a decision would be made to continue with the policy of recruitment with a sense of unease (as indicated by the neonatolgist's account in Box 3, Chapter 1), or collaboration would be suspended and INO would be given outwith the trial. This may link to a phenomenon which has been referred to as "micro-certainty/macro uncertainty" identified in a study of breast cancer specialists who were shown to pursue their own treatment decisions despite their awareness of the lack of consensus which pertained for that clinical situation (Deber & Thompson 1987). The research presented here suggests that equipoise can exist for individuals on macro and micro levels, and that the micro level can be subject to fluctuation without undermining the stability of the macro level of equipoise. If however the loss of micro-level equipoise became the dominant position for a sizeable proportion of

clinicians, local or community equipoise can shift, as was seen in INNOVO for term babies.

Clinician orientation in terms of care and research

In earlier debates on the role of clinicians collaborating with clinical trials, concern was expressed that their commitment to generating scientific evidence would mean that the welfare of individual trial participants (their patients) would no longer be their primary concern (Schafer 1982; Hellman & Hellman 1991). The existence of clinical equipoise was not always seen as a solution to this issue as some suggested that it is unlikely that a clinician would have no suspicion about the superiority of one arm of a trial (Appelbaum et al 1987); enrolment of patients with the possibility that they will receive what their clinician views as an inferior treatment, would constitute an abrogation of responsibility and negation of the Hippocratic Oath (Zajicek, 1995). In recent years the pendulum appears to have started to swing in the opposite direction with the suggestion that those involved in trials often enrol their patients for therapeutic rather than research purposes; in this account the role of therapist is prioritised over the role of experimenter. Clinicians are said to have a "therapeutic orientation" in relation to clinical trials (Miller & Rosenstein 2003).

The research reported here suggests that the clinicians involved in this research did indeed exhibit a clinical orientation but this did not reflect a blanket approach to research. It differed according to the conditions set by the two different trials. While a therapeutic orientation was commonly expressed in relation to the INNOVO Trial, a clear research orientation predominated for the CANDA Trial. For the INNOVO Trial there was evidence that as the condition of a baby worsened, a research orientation could shift to a therapeutic orientation in tandem with diminishing micro levels of equipoise as described above.

This difference in orientation between the two trials is indicated in a very clear difference in approaches to recruitment. For the CANDA Trial a decision to approach parents could be reversed mid-conversation if a neonatologist realised that the parents would be stressed by information that they were about to give. For the INNOVO Trial there was a delicate balancing act in changeable circumstances, in which clinical

judgements were made alongside strategic consideration of research collaboration. The neonatologists rarely described situations where they decided not to make an approach due to difficult circumstances. It was in fact the case that they could feel that an approach was appropriate even to parents in the most stressful of circumstances because of the potential, however slim, to bring a therapeutic advantage to a critically ill baby. Whilst this could lead to recruitment with a specific therapeutic intention (the hope that a baby will be allocated to the experimental arm of the trial), in the most extreme cases this drive could tip over into a decision not to risk recruitment but to give the experimental agent directly, or to override allocation to the control arm, decisions which are wholly therapeutic in intent. This suggests a temporary suspension of the role of investigator and a return to an exclusive role as a therapist.

It seems very likely that the therapeutic climate of some trials may complicate the experimenter-therapist tension. The setting and style of individual trials may well set up particular difficulties in establishing or maintaining a clear distinction between research and care. The essential difference between explanatory and pragmatic trials is one example of how this might occur. For explanatory trials there are restrictive regimes governing the comparison of an intervention and a control arm of a trial, with the aim being to explain possible differences under controlled conditions. For pragmatic trials the aim is to assess an intervention in the context for which it is intended, taking into account the variability of clinical decision-making, local expertise and the condition and compliance of patients. As pragmatic trials assess an intervention in light of the different ways that it might be used in practice, clinicians are given a greater degree of freedom to interpret eligibility criteria and to shape implementation of an intervention. In pragmatic trials such as the INNOVO Trial it may well be that the role of the therapist is actually given a degree of prominence precisely because assessment of an intervention in context requires the investigator-therapist to act according to the norms of clinical care. By comparison, the CANDA Trial was explanatory and so the use of the trial intervention was highly regulated. The neonatologists were required to modify their usual clinical use of surfactant to ensure that in each trial centre it was administered within the tight timing schedule as laid out by the trial protocol. This requirement for a clear and regulated shift in practice emphasises the difference between usual care and research.

This complicated situation where allegiance to care and research are often poorly delineated has been widely seen as problematic. Although some of the senior neonatologists were very clear on the terms of their own collaboration with research, and were familiar with debates on equipoise and the experimenter-therapist tension, they also could exhibit the same oscillation between care and research as their younger, less experienced colleagues. This may well be because the ability to fluctuate and change loyalties can be seen as highly appropriate and a responsible professional approach. The comment from an experienced trialist and LPI that "looking after the family comes way before the trial," is essentially the same argument that is made in the Declaration of Helsinki, that the needs of society must not be placed ahead of the individual.

Miller and colleagues (1998) argue that it is possible for individual clinicians to achieve a consistent position in which responsibilities to care and research are understood and incorporated into a personal ethical position on clinical trials. This hinges on personal clarity over the primary aim of that individual - that is, whether they are caring for their patient and providing personalised care, or are contributing to research in accordance with a trial protocol. Whilst clarity over the aims may well be achievable, the findings presented here suggest that perfect consistency may not. The neonatologists clearly prioritised the needs of a baby and their parents over research, and this was an essential precondition of the collective approach to a trial. For this reason there was clear oscillation between the rules of care and research.

Links with the theoretical literature

The work of Taylor and various colleagues was instrumental in advancing the earlier theories relating to the experimenter-therapist tension through empirical study. Taylor and Kelner put forward the Physician Orientation Profile by which individual physicians could be placed on a continuum between pure experimenter and pure therapist (Taylor & Kelner 1987). The scale has also been adapted to fit the UK situation and termed the Trial Orientation Profile (Fallowfield et al 1997). This approach is grounded in the concept that clinicians are consistent in their responses to research and care. It taps what has been described in this thesis as views of trials in

principle. Given the focus on abstract responses to research it does not take into account the variability of responses to trials, such as those which have been shown to exist for the CANDA and INNOVO trials, shifts in allegiance over time for different subgroups of the trial target population, or different responses to individual patients

The dual role of experimenter and therapist has since been considered by several authors but of central interest here is the work of Miller and colleagues (Miller et al 1998). Whilst the two Orientation Profiles are premised on clinicians having a consistent and measurable identity in responses to research and care, Miller and colleagues suggest instead that professional responses are based upon confusion and competing loyalties with clinicians oscillating between allegiance to care and to research. They contend that this is part of a deep-seated lack of clarity in the world of clinical trials over the different aims of care and research which is complicated by the identity of clinical trial collaborators as therapists.

> In view of the deep socialization of investigators as clinicians and the blurring of clinical medicine and clinical research ... investigators tend to rely on their moral self-understanding as healers to navigate the murky moral waters of clinical research (Miller et al 1998).

A lack of clarity amongst professionals over the difference between the roles of experimenter and the therapist can spill over into encounters with patients who are invited to become trial participants. If the professional works with the notion that a trial can be used primarily for therapeutic purposes then so will the potential participant.

> Insofar as investigators conflate the context and language of medical care with that of research, they not only reinforce the therapeutic misconception for patient volunteers, they also fall prey themselves to the therapeutic misconception. ... Overcoming the therapeutic misconception is a primary ethical task for physician investigators, both in their self-understanding and the understanding of research that they strive to foster in patient volunteers (Miller et al 1998)

This would seem to be supported by the data presented in this thesis, which showed how responsive parents were to the suggestion that trial enrolment "might help": a phenomenon which was true for the CANDA Trial, as well as for the INNOVO Trial, in spite of the clear differences in the neonatologists' responses to these trials. It may be the case that even where clinicians work with a clear research model in mind, it can

be difficult to find new ways of talking to patients which do not draw on the norms of therapy-led conversations. Communication difficulities have been highlighted in several studies (Donovan et al 2002; Kodish et al 2004; Simon et al 2004)). When Simon and colleagues compared the consent processes for adult and paediatric oncology trials, they found that despite similar levels of associated risk, discussion of risk occurred significantly more often for the adult trials, as did attempts to distinguish the trial risks from those associated with standard therapies. Whilst none of the paediatric consultations included a numerical assessment of the potentials risks of a trial, one third of the adult trial consultations included this information (Simon, et al 2004). Kodish and colleagues observed the information process for parents considering a paediatric leukaemia trial, and in 12% of the encounters, randomisation was not mentioned (Kodish et al 2004). It is not exactly clear what is happening in these situations but it may be the case that clinicians are offering a degree of protection to vulnerable parents, as was the case for some of the neonatologists studied by Mason and colleagues (2000). It may be that their own responses are complicated and the distinction between care and research can be difficult to maintain.

It has been suggested that the conflation of research and care in this situation can be addressed by encouraging clinicians to take on the role of investigator in isolation from their caring role (Katz 1993). Although Miller and colleagues argue that there is a need for greater understanding of the fundamental difference between the positions of experimenter and therapist, they do not suggest that these roles should be separated. Instead they call for close attention to the divergence of duties in care and research to promote understanding of the essential "moral conflict" between them.

> We need to cultivate a conception of the moral identity of the physician investigator that integrates the role of the clinician and the scientist without giving predominance to one or the other. ... The construction of such a conception of professional integrity is not a matter of creating a new identity but of bringing to light and cultivating the refined self-understanding and comportment of exemplary clinical researchers (Miller et al 1998).

The ability to hold steady the roles of experimenter and therapist fully cognisant of their differences would also lend "integrity" to clinical research. The development of an integrated sense of one's relation to research and the researched is however

recognised by the authors as "a challenging task for physician investigators in view of the inherent ethical complexities of clinical research."

The theoretical perspective of Miller and colleagues draws on phenomena which are clearly present in the data presented in this thesis. For many of the neonatologists, decisions to offer enrolment in a trial could be made with the specific interests of individual patients predominating. Their reluctance to consider asking bereaved parents if they would consent to trial-related PM pathology studies is part of the same drive to protect, and stems from within a therapeutic framework. This therapeutic drive behind trial recruitment has also been observed amongst clinicians recruiting to oncology trials (Joffe et 2001) and to early phase gene transfer trials (Henderson et al 2004). Henderson and colleagues suggested that balancing the "hopes and expectations for themselves and for their subjects" could be "extraordinarily challenging" for clinicians, a statement which could also be applied to the neonatologists. Certain clinicians did however appear to have achieved a sense of balance in their responsibilities to research and to their patients, displaying a sense of integration of the clinical and research work that they do. They were, to paraphrase the words of one consultant, at peace with themselves. This may come with growing experience and exposure to clinical trials, a result of a gradual process of enculturation into the world of research.

The influence of recruitment in extreme circumstances on the development of the therapeutic misconception

It was not surprising to find that the therapeutic misconception was present in many of the decisions made by the parents interviewed for this study. This phenomenon has been previously demonstrated in neonatal trials (Snowdon et al 1997) as well as in many other settings (Joffe et al 2001; Lidz et al 2004; Vitiello et al 2005). The analysis of the neonatologists' interviews indicated that there were situations, especially in relation to the INNOVO Trial, where they utilised the research for therapeutic purposes. It is likely that this was communicated to parents who then also viewed participation from a therapeutic perspective. It was however particularly interesting to find that the therapeutic misconception was prevalent amongst the

parents for the CANDA Trial as well as for the INNOVO Trial even though the former was thought by the neonatologists to be unlikely to benefit the individual babies in the trial. This would suggest that the therapeutic misconception could have arisen for a number of additional reasons, some of which have been considered for trials in other settings.

There are some parallels between the views of parents who are asked to consider trial participation in dire circumstances, and the views of participants in Phase I toxicity trials. Those agreeing to participate in trials at an early stage of the development of an intervention, especially in oncology, are often those for whom other treatment options have been exhausted. There is a considerable body of evidence to indicate that they often do so in the hope of benefit, despite the chances of benefit being low (Cox 1999; Daugherty et al 2000, Meropol et al 2003, Weinfurt et al 2003). Weinfurt and colleagues suggest that the strong wish of those involved in Phase I oncology trials to see a therapeutic potential in a trial situation, may lead them to misconstrue the likelihood of benefit (Weinfurt et al 2003). Minogue and colleagues describe patients whose "autonomy is diminished by fatal illness" who consent to trials in order to access experimental treatment, as "desperate volunteers" (Minogue et al 1995). The parents involved in these trials may be similarly compromised. For those offered the INNOVO Trial there may be few options left and consent can be given out of a wish to turn around their situation. Their vulnerability, coupled with the speed of their decisions might have made it difficult to gain an appreciation of the exact nature of the offer that was being made and the undertaking involved.

There may also be some common ground with adult patients asked to make decisions about trial participation in stressful circumstances. The views of myocardial infarction patients (Ågård et al 2001; Williams et al 2003; Gammelgaard et al 2004) and those with subarachnoid haemmorhages (Yuval et al 2000) for whom consent for enrolment in a trial is sought in an emergency setting have been considered empirically. These studies indicated how potential trial participants could be confused, anxious, in pain, and be required to make decisions under certain time constraints. One of the participants in a myocardial infarction trial made a comment which is strikingly similar to those made by many of the parents involved in the CANDA Trial:

> All I remember was that there were two equally good clot dissolving preparations A and B. That [information] was sufficient for me to say 'I'm in.' (Ågård et al 2001).

This interviewee describes exactly the same process of sifting information given at a time of crisis for the critical factor that results in a rapid decision about a trial.

The parental interviews in this study highlighted one possible way in which the nature of the decision that was required may have been obscured. The offer of enrolment to the CANDA Trial was commonly embedded within a standard conversation about the implications of preterm and basic features of an intensive care approach. Whilst the clinicians viewed this as appropriate, rather than a cold approach, it may have reduced the chances of parents distinguishing between care and research. Similarly for the INNOVO Trial the parents were often given an update on the condition of the baby as a precurser to an explanation of the details of the trial by the neonatologist who was already providing care. Wherever a conversation included discussion of the threat that exists for a baby, whether this is a revelation or a reminder, seems to create a heightened moment of vulnerability. At this point they parents were particularly receptive to anything that "might help". This was demonstrated in Cheryl's instant statement that she would accept the INNOVO Trial the moment that the consultant touched upon the worst case scenario. The flip-side of this is Shelley and Evan's instant rejection of the CANDA Trial. Whilst for them alientation was a driving force, for many other parents, trust, usually a very positive element in medicine, may have acted as an impediment to critical thinking. In situations where urgency is an issue, a particular type of trust comes to the fore, a leap of faith which for some was not based on a particularly clear understanding of what they were being offered, but on appreciation of the need for action and that feeling that the neonatologist saw the trial as a possible solution. Trust and the broader context of care in which all other decisions about a baby are being made, might make it difficult to appreciate that this decision has a different basis and the needs of the baby are not central to the decision. In circumstances where the needs of the baby are in fact central to the professional decision, as suggested by this research, then such an appreciation may be impossible.

In circumstances which are complicated and sometimes stressful for professionals as well as for parents, it can be difficult to tell what information an individual desires, fears, or is able to absorb. Even the small number of tape recordings of the discussions

asking for consent to participation in the INNOVO and CANDA trials indicated differing amounts of information proffered, as well as a variety of styles in which information was delivered by the clinicians to the parents. This may lead to a selective approach to information giving. The information that the parents were, or were not given might have led them to believe that the trial might benefit their baby.

Suggestions for addressing some of these issues

Some of the problems identified in this thesis are complex and deep rooted. The challenge is to find ways to improve the situation in which research is considered which incorporate and accommodate the needs of the various parties involved. Much work is already underway to address these issues, at theoretical and empirical levels. Some of the relevant broad areas of inquiry and intervention, along with suggestions which arise from this research, are considered below in terms of:

- Professional training
- Alternative approaches to recruitment
- Approaches to information giving
- Earlier communication about research
- Continuous consent
- Payment of participants

Professional training

Very few of the neonatologists had received any formal training in research. Some had covered this topic as part of higher qualifications but the main way that they learned about trials was through the literature, in house-discussions in preparation for trials (not in all NICUs), and a gradual process of exposure to recruitment processes. Some of the consultants argued that learning by observation was a standard approach in medicine, but very few of the younger doctors stated that they had spent time observing colleagues discussing trials with parents. There was a very strong message that there is a stressful period of struggle with recruitment which gradually recedes with growing experience. For some of the younger interviewees, all of whom had current responsibilities for recruitment, that struggle was ongoing.

Although some were reticent about the value of training, feeling that communication skills are innate rather than taught, almost all of the neonatologists felt that training which would improve appreciation of the rationale for research methods, research ethics, and the practicalities of recruitment, would be desirable. Novack and colleagues suggest that there is a need to promote professional awareness of how personal responses can shape decisions about offering trial participation to patients; they referred to the process of raising awareness as "Calibrating the physician" (Novack et al 1997). For the shift in perspective suggested by Miller and colleagues to work in practice it would require a process akin to consciousness raising in which clinicians work though their motivations, allegiances and deal with the emotional responses that are integral to their drive to protect and care for individual babies and their parents

Any trial-related training should be timed so that it has a direct bearing on practice when it is most needed. Perhaps it is incumbent upon trialists and trial funders to ensure that those who will recruit to their trial are adequately prepared; recruiters may need training to ensure an appropriate level of understanding of the research in question, of the broader ethical issues that are raised, and of their own, and their patients' positions in relation to care and research. This could take the form of in-house training, or visits by trialists for active training sessions. The ORACLE Trial team responded to failing recruitment rates with a highly successful multi-pronged training programme. Local midwives were employed to work 3 hours a week in the participating units. They underwent an intense two-day induction course, six-monthly trial updates and were in regular contacts with regional midwives who provided support and advice (Kenyon et al 2005). Trialists and funders may also need to consider the use of external courses. Successful programmes do exist (Fallowfield et al 2002; Fallowfield et al 2003) but currently the majority of UK health professionals receive no such training.

Perhaps it is appropriate to consider the need for informed consent from those who will be responsible for recruitment as a prerequisite to trial collaboration. It is wholly feasible that tools such as BICEP (Sugarman et al 2005) which are designed to test the

quality of consent could be modified for use with professionals to promote familiarity with a trial and to ensure that broader research issues are fully appreciated.

Alternative approaches to recruitment

Undoubtedly the offer of inclusion in a trial can exacerbate stress for those at the centre of the decision-making process. Some of the suggestions which have been made to address this situation were touched upon in Chapter 2. These largely relate to not informing patients at the point of randomisation of their inclusion in a trial something that was first put forward by Bradford Hill in 1963 (Hill 1963). Zelen (1979; 1990; 1997) suggested that randomisation could take place before consent, so that decisions are made in the knowledge of the allocated treatment. In some Zelen consent designs, only those randomised to the experimental arm of a trial are asked to decide about trial participation; those allocated to the control arm are included as a matter of course. Manning (2000) suggests that for emergency neonatal trials women should be informed antenatally and unless they opt out, their baby should be enroled should the situation arise. Parents do however seem to value the consent process, despite any associated stress and the need to take on board complicated information. The majority do not wish to see it replaced with alternatives, such as Zelen's approach to consent (Snowdon et al 1998) or allowing doctors to decide who should or should not participate in research (Zupancic et al 1997; Mason et al 2000; Burgess et al 2003; Stenson et al 2003; Morley et al 2005). Parents generally want to be active participants, even if it is in what may seem to the observer to be in a limited form. Menikoff (2003) suggested that choice should be given greater prominence, and only those who do not want to select their treatment should be randomised. For those with a preference, trial treatments could be made available to them outside the trial. It is not clear however that such an approach would decrease stress in such an uncertain and difficult situation, as patients and proxies would have direct responsibility for choosing a treatment, as well as for choosing not to choose a treatment, a welcome option for some but a possibly unsettling responsibility for others.

Approaches to information giving

There have been many attempts to improve levels of comprehension of information about randomised trials given in the standard approach to consent, but few have shown an appreciable level of success (Flory & Emanuel 2004). There has been a move in some research situations to warning potential trial participants of the possibility that they will be asked to consider taking part in research. For some perinatal trials, leaflets are left in antenatal clinics to warn parents that they may be approached about research at a later date. In some trials labouring women could only be offered trial participation if there was a sticker in their obstetric notes to indicate that they had been personally given an antenatal leaflet. Some of the women who were approached for the CANDA Trial in labour commented that they had been in the hospital for some time and would have preferred to have been approached at an earlier point, a finding also reported by Ferguson (2000). Improving communication between midwives, obstetricians and neonatologists would seem to be a useful area to explore, to work out the most effective mechanism for identifying those who are eligible for a trial. Earlier approaches do however mean that some consent to a trial but do not go on to fulfil eligibility criteria, (e.g. delivery is averted, a baby does not deteriorate to the point of eligibility) and this may raise false expectations and unnecessary anxiety. Some of the parents in the ECMO Trial Study were approached at an earlier stage as a preparation and were left with the feeling that their already struggling baby needed to decline further before they might be considered for a potentially helpful treatment (Snowdon et al 1997).

For certain trials it will always be necessary to approach people who are in extremis. It is therefore highly appropriate to develop methods which are specifically focused on professional and patient/proxy needs in these situations. Continuous or ongoing consent, has been suggested (Wendler & Rackoff 2002; Cattorini & Mordacci 1993; Angiolillo et al 2004) and has been seen as potentially valuable for particularly difficult neonatal trials (Manning 2000). Continuous consent is currently being explored in a neonatal trial of hypothermia (TOBY) for which the trial intervention must be initiated within six hours of birth (Allmark et al 2003). The trial includes a concurrent qualitative assessment of a process whereby parents are given preliminary information shortly after delivery whilst their baby undergoes eligibility assessment. If eligible the parents are given further information and offered trial participation.

During the course of the intervention period the trial is discussed with parents on one further occasion.

Such an approach may be a step towards addressing some of the difficulties of the type which affected Carly and Peter, who were left with distressing concerns about their experiences with research. It may help with the difficulties experienced by parents such as Janine whose anger was to some extent further fuelled by misconceptions about the research that she had been offered[69]. It does not however address the fact that parents give their initial consent for possible allocation to an intervention which cannot be reversed. The option of withdrawing from a trial once an intervention has been initiated may be valuable if parents feel a sense of discomfort over their decision, but it may have limited value for those concerned about initial exposure or for those allocated to the control arm. An additional value which might arise from the involvement of staff in continuous consent is an increased focus on the need to ensure understanding amongst those who have given consent, emphasising that consent should be substantive rather than "technical" (Kestin 1998) or "symbolic" (Horng et al 2002).

If the continuous consent process were to be continued to a later point, for instance to discharge or a bereavement follow-up visit, this could include a form of debriefing in which parents would have the opportunity to gain an understanding of events and their role within them in the light of the outcome for their baby. Debriefing as a form of psychological support after traumatic obstetric events have been explored (Priest et al 2003; Lavender & Walkinshaw 2005). This may be particularly valuable in helping to address the grief of any bereaved parents, especially those who were allocated to a trial arm which was shown to be associated with higher rates of mortality[70]. This

---

[69] That is, participation in the CANDA Trial would have resulted in her baby being denied access to dexamethasone, a steroid which she felt was given to all of the other babies who were cared for in the NICU alongside her son.

[70] During this study an issue arose which indicates just how difficult this situation could be. With the co-operation of several consultants, interviews with bereaved parents from one NICU were arranged. Immediately prior to the interview a letter was sent from the NICU to this small group of parents to inform them of the trial results and the allocation for their baby. This placed me potentially at the front line of any difficulties that the parents might have had. In all cases however the parents were told that the outcome for their baby was unlikely to have been affected by the trial allocation. Whilst this might well be the case, where there are differences between trial arms, some participants must have been subject to that difference. Although a kindly approach, this appeared to reflect an enormous difficulty which pertains for trials in situations where differences in mortality are an essential aspect of the

approach could be applied to other emergency situations outside of neonatology where consent may have been complicated by stress and the urgency of the decision-making process.

Payment of participants

Payment of research participants is a practice which currently relates to healthy volunteers choosing to participate in commercial trials. Payment in the type of circumstances considered here is a very alien concept. It has however been suggested as a means to ensure that trial participants see that what they are consenting to departs from the usual terms of the doctor-patient relationship (Dickert & Grady 1993). Discussion of this issue, even if rejected, could raise the profile of the need to find ways of making explicit the terms of the decisions that individuals are required to make, improving appreciation of the differences between care and research.

Limitations of this research

It was a great pity that a central aim of the study (tape recording the conversations in which trial enrolment was offered) was abandoned. The value of such tapes is made clear through the small amount of recorded data which are available. Although some transcripts have been used for illustrative purposes, without a larger dataset it was necessary to reorient the research to consider only the information which the neonatologists felt that they give and that which the parents felt they were given.

The parents interviewed here were in very particular circumstances and some of their views may not generalise to other settings. They were required to decide about research with a focus on the effects upon their highly vulnerable baby and decisions which are made by proxies have an extraordinary level of associated responsibility. The speed at which their decisions were often required may also be unusual.

The fact that data on the subject of PMs were collected as an adjunct to the larger issues of professional experiences of trials, means that the study was not set up

---

research inquiry. To some extent the difficulties that many professionals appear to experience on discussing trials with potential participants may relate to anticipation of just this situation.

primarily to explore these issues. As PMs were not the specific focus of the interviews, the data are incidental and do not provide a full description of experiences of and reactions to the consent process. As the number of parental interviews is limited a narrow range of experiences is represented. Access to the parents was negotiated via their consultant and it is likely that this acts as a filter. Consultants were very protective of bereaved parents and those who were considered to have been particularly distressed were less likely to be asked to participate in research which would explore their painful experiences.

Recommendations for future research

It is most important that the issues raised through this research should receive further attention, through discussion by the wider research community and through dedicated research.

The actual consent process should be documented to elucidate sources of therapeutic misconception. Although this element of the research proved to be so problematic, other researchers have since published observational data collected in difficult circumstances. This indicates not only that this is feasible but also that there may be increasing support for such an empirical approach. It would be valuable to assess the continuous consent process in several trial settings from the perspectives of all relevant parties. A measure of the impact of this approach on parental wellbeing, professional research skills, and on the prevalence of the therapeutic misconception would be valuable.

Quite clearly, all parties require a degree of support in this stressful situation. The neonatologists were very clear that training which would improve appreciation of the rationale for research methods, research ethics, and would assist with the practicalities of recruitment, would be desirable. A fruitful and positive area for research would be to fully assess these needs to guide training which might be provided by individual NICUs or as part of the preparatory period for given trials. If training were to address the issues suggested by Miller and colleagues (Miller et al 19998), it may be the case

that it should be based upon sound developmental research and its implementation evaluated.

Research is necessary to understand the ways in which additional support might be needed and implemented for parents involved in trials in very difficult situations. They may benefit from access to an advisor trained in clinical trials with specific knowledge of the research in which they agreed or declined to participate. Such an advisor may clarify areas of confusion, offer a form of debriefing, as suggested above, and offer longer-term support should it be required. An investigation into parental reactions and experiences of such a service would be desirable.

There has been a surge in the use of qualitative research to understand collaboration and participation in clinical trials. The next step is for qualitative methods to be included as an integral funded part of trials, as are dosage or toxicology studies. Donovan and colleagues have shown that action research can act as a monitor throughout the trial, allowing feedback while a trial is in operation so that research findings can influence and improve an existing trial rather than only trials of the future (Donovan et al 2002). For the INNOVO Trial a dedicated qualitative study which aimed to monitor recruitment may have led to an understanding of why the sicker babies were being recruited which might have allowed an intervention by the trial team to encourage earlier randomisation.

There is a move towards informing participants of the results of trials and in this context in particular this should be done with careful evaluation. As yet the implications for bereaved parents who receive feedback of trial results are unexplored. Just as trialists exhort that a new intervention should be the subject of research, so should this type of intervention in the lives of potentially vulnerable individuals.

Conclusions

Although there were considerable methodological and practical difficulties in carrying out this study, the research nevertheless resulted in original insights which may add to

theory and be of practical use to trialists and clinicians. Whilst the study did raise some concerns for some clinicians, it seemed that it was conducted without any obvious adverse effects.

In its simplest form it was shown that whilst the neonatologists viewed the two trials in very different terms, the parental accounts of the trials were very similar. The therapeutic misconception was present for both neonatologists and for parents. Further debate is necessary to consider where the therapeutic drive best fits in relation to clinical trials in such extreme circumstances.

At a more sophisticated level, this study has shown that the neonatologists' decisions about collaboration were complex and multi-tiered, and made in relation to very variable factors. Arguably the most important finding to emerge is the delineation of local forms of equipoise and the exploration of their influence on the redefinition of terms of collaboration within trial centres. Decisions to collaborate were made in the context of collegiate and hierarchical local systems, and were driven by research principles and the desire to benefit the individuals who act at trial participants. Decisions to suspend collaboration, by comparison, were made wholly within the context of the doctor-patient relationship with the interests of individuals firmly at the forefront. This suggests that the interplay of research and care can change according to circumstances and has implications for how this important issue might be understood. It feeds directly into discussions of the presence of therapeutic orientation as an impetus for recruitment and professional responsibility of clinicians associated with trials.

The parental decisions superficially appeared to be much more simple. They were made quickly, often in response to the timescale that was set by their circumstances, and largely in order to benefit their baby. The parents involved in the CANDA Trial often displayed little understanding of the nature of the research, expressed few treatment preferences and were frequently unaware of the allocation that was made for their baby. By comparison the parents involved in the INNOVO Trial almost all consented with the explicit hope of accessing INO. Although there was some

confusion about the trial, none were unaware of their allocation[71]. The support that the parents expressed for neonatal research may be shown through future dedicated research to extend to support for trial-related PM pathology studies, an issue which the neonatologists were generally quite reticent about raising.

Although the neonatologists viewed the CANDA and the INNOVO trials in very different ways, for the parents there were few differences in the ways that they saw the two trials. The neonatologists took an essentially discriminatory position, judging the trials according to the terms and conditions that they set in relation to local practice and local concerns, and according to the possible impact on individual babies. Those associated with the CANDA Trial appeared to view the trial quite clearly within an experimental framework. It may have been precisely because it was to some extent seen as a form of non-therapeutic research[72], where the trial interventions were unlikely to differentially affect the outcome for an individual baby, that the role of therapist and experimenter could be more evenly balanced. The therapeutic orientation in the INNOVO Trial appears to have been stronger precisely because equipoise amongst the neonatologists was unstable and because the therapeutic need of individuals was high. It may be that the life-threatening circumstances that could pertain for the INNOVO Trial were sufficient to override all other considerations leading the neonatologists to act predominantly as therapists. The parents almost universally hoped for a benefit from trial participation and were just as likely to see risk in one trial as the other[73] even if they were not particularly clear as to what the trials entailed. Their responses to the trials were largely driven by a sense of fear, hope, trust and expectations of care.

The relationship between the neonatologists and the parents, what was said, not said, and inferred, are central to the experiences of all involved in this research. Much of what was discussed in the interviews revolved around professional and parental aims. Sometimes these were divergent; often they converged. They were rarely separated

---

[71] One possible exception is Kerry (Int.70) whose baby was allocated to INO. She was aware of randomisation but substituted INO with steroids in her account of the trial intervention.
[72] This is not the usual usage of the term, non-therapeutic research, but it is used here to convey a distinction between how the CANDA and the INNOVO trials might have been seen.
[73] This comment is based on a comparison of the views of the different groups of parents. The parents were not asked to make a comparison.

from the broader and the immediate context of care. This intermingling of care and research, and a lack of a clear distinction between therapeutic and non-therapeutic research, are precisely the elements that many theorists argue need to be addressed in the trials situation. The ethical duties and framework of care provided by the doctor-patient relationship was however central in the accounts of the neonatologists, and would probably be seen as an appropriate safeguard for those who enter research in their care.

This is the fundamental issue at the heart of this thesis. For the neonatologists the trials were introduced into a developing or an existing caring relationship. To separate out only one element of the care of a baby, and one part of a relationship with parents, and apply different rules of engagement, was an almost impossible task without clear guidance and training. The process by which most doctors were prepared for this particular philosophical and ethical challenge appeared, however, to be somewhat haphazard with an indication that they could be "thrown in at the deep end." This could be extraordinarily stressful, especially for those with less exposure to clinical trials. With little training and a high expectation that they should recruit to a trial in accordance with the local collective decision, it may not be surprising to find reliance on the more familiar approach to discussions of treatment options with parents which is grounded in the firmly ingrained drive to provide care. Parents, with little else to guide them, respond to the direction of a trusted clinician and their own instinct to protect their child. Both parties need assistance so that the precise nature of the decisions at the heart of clinical trials can be made clear, and to ensure that those who are associated with research are willing collaborators and participants, fully cognisant of the activity in which they are engaged.

Bibliography

Abramsky, L. and Rodeck, C. H. (1991). Women's choices for fetal chromosome analysis. *Prenat Diagn* **11**: 23-8.

Agard, A., Hermeren, G. and Herlitz, J. (2001). Patients' experiences of intervention trials on the treatment of myocardial infarction: is it time to adjust the informed consent procedure to the patient's capacity? *Heart* **86**: 632-7.

Ainsworth, S. B., Beresford, M. W., Milligan, D. W., Shaw, N. J., Matthews, J. N., Fenton, A. C. and Ward Platt, M. P. (2000). Pumactant and poractant alfa for treatment of respiratory distress syndrome in neonates born at 25-29 weeks' gestation: a randomised trial. *Lancet* **355**: 1387-92.

Alderson, P., Madden, M., Oakley, A. and Wilkins, R., Eds. (1994). *Women's knowledge and experience of breast cancer treatment and research.* London: Social Sciences Research Unit.

Alfirevic, Z., Boer, K., Brocklehurst, P., Buimer, M., Elbourne, D., Kok, J. and Tansey, S. (1999). Two trials of antenatal thyrotrophin-releasing hormone for fetal maturation: stopping before the due date. Antenatal TRH Trial and the Thyroneth Trial Groups. *Br J Obstet Gynaecol* **106**: 898-906.

Allmark, P. (1999). Should Zelen pre-randomised consent designs be used in some neonatal trials? *J Med Ethics* **25**: 325-9.

Allmark, P., Mason, S., Gill, A. B. and Megone, C. (2003). Obtaining consent for neonatal research. *Arch Dis Child Fetal Neonatal Ed* **88**: F166-7.

Angiolillo, A. L., Simon, C., Kodish, E., Lange, B., Noll, R. B., Ruccione, K. and Matloub, Y. (2004). Staged informed consent for a randomized clinical trial in childhood leukemia: impact on the consent process. *Pediatr Blood Cancer* **42**: 433-7.

Anon (1995). Your baby is in a trial. *Lancet* **345**: 805-6.

Anon (2000). The gap between expectations and reality. *BMJ* **320**: A.

Appelbaum, P. S., Roth, L. H. and Lidz, C. (1982). The therapeutic misconception: informed consent in psychiatric research. *Int J Law Psychiatry* **5**: 319-29.

Appelbaum, P. S., Roth, L. H., Lidz, C. W., Benson, P. and Winslade, W. (1987). False hopes and best data: consent to research and the therapeutic misconception. *Hastings Cent Rep* **17**: 20-4.

Arksey, H. (1996). Collecting data through joint interviews. *Social Research Update* **15**: University of Surrey. http://www.soc.surrey.ac.uk/sru/SRU15.html.

Arras, J. D. (1990). Noncompliance in AIDS research. *Hastings Cent Rep* **20**: 24-32.

Ashcroft, R. E., Chadwick, D. W., Clark, S. R., Edwards, R. H., Frith, L. and Hutton, J. L. (1997). Implications of socio-cultural contexts for the ethics of clinical trials. *Health Technol Assess* **1**: i-iv, 1-65.

Ashery, R. S. and McAuliffe, W. E. (1992). Implementation issues and techniques in randomized trials of outpatient psychosocial treatments for drug abusers: recruitment of subjects. *Am J Drug Alcohol Abuse* **18**: 305-29.

Baines, C. J. (1984). Impediments to recruitment in the Canadian National Breast Screening Study: response and resolution. *Control Clin Trials* **5**: 129-40.

Ballard, H. O., Shook, L. A., Desai, N. S. and Anand, K. J. (2004). Neonatal research and the validity of informed consent obtained in the perinatal period. *J Perinatol* **24**: 409-15.

Barber, B. (1976). The ethics of experimentation with human subjects. *Sci Am* **234**: 25-31.

Barkun, J. S., Barkun, A. N., Sampalis, J. S., Fried, G., Taylor, B., Wexler, M. J., Goresky, C. A. and Meakins, J. L. (1992). Randomised controlled trial of laparoscopic versus mini cholecystectomy. The McGill Gallstone Treatment Group. *Lancet* **340**: 1116-9.

Barnes, M. P., Bates, D., Cartlidge, N. E., French, J. M. and Shaw, D. A. (1987). Hyperbaric oxygen and multiple sclerosis: final results of a placebo-controlled, double-blind trial. *J Neurol Neurosurg Psychiatry* **50**: 1402-6.

Baum, M. (1993). New approach for recruitment into randomised controlled trials. *Lancet* **341**: 812-3.

Beauchamp, T. L. and Childress, J. F., Eds. (1994). *Principles of Biomedical Ethics, 4th ed.* New York: Oxford University Press.

Bell, R. A., Kravitz, R. L., Thom, D., Krupat, E. and Azari, R. (2002). Unmet expectations for care and the patient-physician relationship. *J Gen Intern Med* **17**: 817-24.

Benson, A. B., 3rd, Pregler, J. P., Bean, J. A., Rademaker, A. W., Eshler, B. and Anderson, K. (1991). Oncologists' reluctance to accrue patients onto clinical trials: an Illinois Cancer Center study. *J Clin Oncol* **9**: 2067-75.

Benson, P. R., Roth, L. H. and Winslade, W. (1985). Informed consent in psychiatric research: preliminary findings from an ongoing investigation. *Soc Sci Med* **20**: 1331-41.

Berry, D. A. (1989). Ethics and ECMO. *Statistical Science* **4**: 306-16.

Birch, M. and Miller, T. (2000). Inviting intimacy: the interview as "therapeutic opportunity". *Social Research Methodology, Theory and Practice* **3**: 189-202.

Birch, M., Miller, T., Mauthner, M. and Jessop, J. (2002). Introduction. In M. Mauthner, M. Birch, J. Jessop and T. Miller, Eds. *Ethics in Qualitative Research.* London: Sage.

Braunholtz, D. A. (1999). A note on Zelen randomization: attitudes of parents participating in a neonatal clinical trial. *Control Clin Trials* **20**: 569-72.

Brewin, T. B. (1982). Consent to randomised treatment. *Lancet* **2**: 919-21.

Bristol Royal Infirmary Inquiry (2001). Learning from Bristol: The report of the public inquiry into children's heart surgery at the Bristol Royal Infirmary 1984-1995. *Command Paper: CM 5207.*

Britton, A., McKee, M., Black, N., McPherson, K., Sanderson, C. and Bain, C. (1999). Threats to applicability of randomised trials: exclusions and selective participation. *J Health Serv Res Policy* **4**: 112-21.

Brocklehurst, P., Alfirevic, Z. and Chamberlain, G. V. *Protocol for the Trial of the Effects of Antenatal Multiple Courses of Steroids versus a single course*. Oxford, NPEU (http://www.npeu.ox.ac.uk/teams/).

Brocklehurst, P., Elbourne, D. and Alfirevic, Z. (2000). Role of external evidence in monitoring clinical trials: experience from a perinatal trial. *BMJ* **320**: 995-8.

Bryan-Brown, C. W. and Dracup, K. (1996). Outcomes, endpoints, and expectations. *Am J Crit Care* **5**: 87-9.

Burgess, E., Singhal, N., Amin, H., McMillan, D. D. and Devrome, H. (2003). Consent for clinical research in the neonatal intensive care unit: a retrospective survey and a prospective study. *Arch Dis Child Fetal Neonatal Ed* **88**: F280-5; discussion F5-6.

Campbell, H., Surry, S. A. and Royle, E. M. (1998). A review of randomised controlled trials published in Archives of Disease in Childhood from 1982-96. *Arch Dis Child* **79**: 192-7.

Cassileth, B. R., Lusk, E. J., Miller, D. S. and Hurwitz, S. (1982). Attitudes toward clinical trials among patients and the public. *Jama* **248**: 968-70.

Cattorini, P. and Mordacci, R. (1993). The physician as caregiver and researcher. *Thyroidology* **5**: 73-6.

Chalmers, I. (1983). Scientific inquiry and authoritarianism in perinatal care and education. *Birth* **10**: 151-66.

Chalmers, I. (1986). Minimizing harm and maximizing benefit during innovation in health care: controlled or uncontrolled experimentation? *Birth* **13**: 155-64.

Chalmers, I. (2001). Comparing like with like: some historical milestones in the evolution of methods to create unbiased comparison groups in therapeutic experiments. *Int J Epidemiol* **30**: 1156-64.

Chalmers, I., Enkin, M. and Keirse, M. J. N. C. (1989). Evaluating the effects of care during pregnancy and childbirth. In I. Chalmers, M. Enkin and M. J. N. C. Keirse, Eds. *Effective Care in Pregnancy and Childbirth*. Oxford: Oxford University Press.

Chalmers, T. C. (1977). Randomize the first patient. *N Engl J Med* **296**: 107.

Chard, J. A. and Lilford, R. J. (1998). The use of equipoise in clinical trials. *Soc Sci Med* **47**: 891-8.

Chariot, P., Witt, K., Pautot, V., Porcher, R., Thomas, G., Zafrani, E. S. and Lemaire, F. (2000). Declining autopsy rate in a French hospital: physician's attitudes to the autopsy and use of autopsy material in research publications. *Arch Pathol Lab Med* **124**: 739-45.

Clarke, M. (1996). 1948 and all that. How far back should we look for RCTs and CCTs? Proceedings of the Fourth Cochrane Collaboration Colloquium 1996, A16, Abstract 9, Monday 21st October.

Cohen, G. I. (2003). Clinical research by community oncologists. *CA Cancer J Clin* **53**: 73-81.

Comis, R. L., Miller, J. D., Aldige, C. R., Krebs, L. and Stoval, E. (2003). Public attitudes toward participation in cancer clinical trials. *J Clin Oncol* **21**: 830-5.

Cook, R. C., Alscher, K. T. and Hsiang, Y. N. (2003). A debate on the value and necessity of clinical trials in surgery. *Am J Surg* **185**: 305-10.

Corrigan, O. (2003). The limitations of current ethical regulations. In J. Abraham and H. Lawton Smith, Eds. *Regulation of the Pharmaceutical Industry*. Hampshire: Palgrave Macmillan.

Cottreau, C., McIntyre, L. and Favara, B. E. (1989). Professional attitudes toward the autopsy. A survey of clinicians and pathologists. *Am J Clin Pathol* **92**: 673-6.

Coulter, A. (1997). Partnerships with patients: the pros and cons of shared clinical decision-making. *J Health Serv Res Policy* **2**: 112-21.

Coulter, H. (1991). *The Controlled Clinical Trial: An analysis*. Washington, DC, Center for Empirical Medicine.

Cox, K. (1999). Researching research: patients' experiences of participation inphase I and II anti-cancer drug trials. *European Journal of Oncology Nursing* **3**: 143-52.

Cox, K. (2000). Enhancing cancer clinical trial management: recommendations from a qualitative study of trial participants' experiences. *Psychooncology* **9**: 314-22.

Cox, K. and McGarry, J. (2003). Why patients don't take part in cancer clinical trials: an overview of the literature. *Eur J Cancer Care (Engl)* **12**: 114-22.

Daugherty, C., Ratain, M. J., Grochowski, E., Stocking, C., Kodish, E., Mick, R. and Siegler, M. (1995). Perceptions of cancer patients and their physicians involved in phase I trials. *J Clin Oncol* **13**: 1062-72.

Deber, R. B. and Thompson, G. G. (1987). Who still prefers aggressive surgery for breast cancer? Implications for the clinical applications of clinical trials. *Arch Intern Med* **147**: 1543-7.

Department of Health (2003). Families and post mortems: A code of practice. London, DoH.

Dickert, N. and Grady, C. (1999). What's the price of a research subject? Approaches to payment for research participation. *N Engl J Med* **341**: 198-203.

Dobkin, B. H. (1990). A testing time: a doctor's thoughts on having his patients participate in double blind study of ticlopidine. *Discover* **11**: 86.

Doll, R. (1992). Sir Austin Bradford Hill and the progress of medical science. *BMJ* **305**: 1521-6.

Donovan, J., Mills, N., Smith, M., Brindle, L., Jacoby, A., Peters, T., Frankel, S., Neal, D. and Hamdy, F. (2002). Quality improvement report: Improving design and conduct of randomised trials by embedding them in qualitative research: ProtecT (prostate testing for cancer and treatment) study. Commentary: presenting unbiased information to patients can be difficult. *BMJ* **325**: 766-70.

Doucet, A. (1998). Interpreting mother-work: linking methodology, ontology, theory and personal biography. *Canadian Woman Studies* **18**: 52-8.

Dudek-Shriber, L. (2004). Parent stress in the neonatal intensive care unit and the influence of parent and infant characteristics. *Am J Occup Ther* **58**: 509-20.

Dudley, H. A. (1986). Stones, lithotripters, trials, and arguments. *Br Med J (Clin Res Ed)* **292**: 846-7.

Duncombe, J. and Jessop, J. (2002). 'Doing rapport' and the ethics of 'faking friendship'. In M. Mauthner, M. Birch, J. Jessop and T. Miller, Eds. *Ethics in Qualitative Research*. London: Sage.

Edwards, S. J., Lilford, R. J. and Hewison, J. (1998). The ethics of randomised controlled trials from the perspectives of patients, the public, and healthcare professionals. *BMJ* **317**: 1209-12.

Elbourne, D. (1987). Subjects' views about participation in a randomized controlled trial. *J Reprod Infant Psychol* **5**: 3-8.

Emanuel, E. J., Wendler, D. and Grady, C. (2000). What makes clinical research ethical? *JAMA* **283**: 2701-11.

Eriksson, S. and Granstrom, L. (1995). Randomized controlled trial of appendicectomy versus antibiotic therapy for acute appendicitis. *Br J Surg* **82**: 166-9.

Fallowfield, L., Jenkins, V., Farewell, V., Saul, J., Duffy, A. and Eves, R. (2002). Efficacy of a Cancer Research UK communication skills training model for oncologists: a randomised controlled trial. *Lancet* **359**: 650-6.

Fallowfield, L., Jenkins, V., Farewell, V. and Solis-Trapala, I. (2003). Enduring impact of communication skills training: results of a 12-month follow-up. *Br J Cancer* **89**: 1445-9.

Fallowfield, L., Ratcliffe, D. and Souhami, R. (1997). Clinicians' attitudes to clinical trials of cancer therapy. *Eur J Cancer* **33**: 2221-9.

Featherstone, K. and Donovan, J. L. (1998). Random allocation or allocation at random? Patients' perspectives of participation in a randomised controlled trial. *BMJ* **317**: 1177-80.

Featherstone, K. and Donovan, J. L. (2002). "Why don't they just tell me straight, why allocate it?" The struggle to make sense of participating in a randomised controlled trial. *Soc Sci Med* **55**: 709-19.

Ferguson, P. (2000). Testing a drug during labour: the experiences of women who participated in a clinical trial. *Journal of Reproductive and Infant Psychology* **18**: 117-31.

Field, D., Elbourne, D. and for the INNOVO Trial Group (1999). Neonatal Ventilation with INhaledNitric Oxode versus Ventilatory support withOut inhaled nictric oxide for severe respiratory failure: a multicentre randomised controlled trial (Protocol). *http://www.innovo-trial.org.uk/*.

Field, D., Elbourne, D., Truesdale, A., Grieve, R., Hardy, P., Fenton, A. C., Subhedar, N., Ahluwalia, J., Halliday, H. L., Stocks, J., Tomlin, K. and Normand, C. (2005). Neonatal Ventilation With Inhaled Nitric Oxide Versus Ventilatory Support Without Inhaled Nitric Oxide for Preterm Infants With Severe Respiratory Failure: the INNOVO multicentre randomised controlled trial (ISRCTN 17821339). *Pediatrics* **115**: 926-36.

Finer, N. (1997). Inhaled nitric oxide in neonates. *Arch Dis Child Fetal Neonatal Ed* **77**: F81-4.

Flory, J. and Emanuel, E. (2004). Interventions to improve research participants' understanding in informed consent for research: a systematic review. *Jama* **292**: 1593-601.

Fost, N. (1979). The ethics of randomized clinical trials: two perspectives. *N Engl J Med* **300**: 1272-5.

Freedman, B. (1987). Equipoise and the ethics of clinical research. *N Engl J Med* **317**: 141-5.

Fried, C. (1974). *Medical Experimentation: Personal Integrity and Social Policy*. New York, Elsevier.

Fries, J. F. and Krishnan, E. (2004). Equipoise, design bias, and randomized controlled trials: the elusive ethics of new drug development. *Arthritis Res Ther* **6**: R250-5.

Gammelgaard, A., Mortensen, O. S. and Rossel, P. (2004). Patients' perceptions of informed consent in acute myocardial infarction research: a questionnaire based survey of the consent process in the DANAMI-2 trial. *Heart* **90**: 1124-8.

Garcia, J., Elbourne, D. and Snowdon, C. (2004). Equipoise: A case study of the views of clinicians involved in two neonatal trials. *Clin Trials* **1**: 170-8.

Gates, S., Brocklehurst, P., Campbell, M. and Elbourne, D. (2004). Recruitment to multicentre trials. *Br J Obstet Gynaecol* **111**: 3-5.

Glogowska, M., Roulstone, S., Enderby, P., Peters, T. and Campbell, R. (2001). Who's afraid of the randomised controlled trial? Parents' views of an SLT research study. *Int J Lang Commun Disord* **36 Suppl**: 499-504.

Gotay, C. C. (1991). Accrual to cancer clinical trials: directions from the research literature. *Soc Sci Med* **33**: 569-77.

Grant, A. M., Altman, D. G., Babiker, A. B., Campbell, M. K., Clemens, F. J., Darbyshire, J. H., Elbourne, D. R., McLeer, S. K., Parmar, M. K., Pocock, S. J., Spiegelhalter, D. J., Sydes, M. R., Walker, A. E. and Wallace, S. A. (2005). Issues in data monitoring and interim analysis of trials. *Health Technol Assess* **9**: 1-238, iii-iv.

Gray, B. H. (1975). *Human Subjects in Medical Experimentation: a sociological study of the conduct and regulation of clinical research*. New York, Wiley.

Green, J. and Britten, N. (1998). Qualitative research and evidence based medicine. *BMJ* **316**: 1230-2.

Green, J. and Thorogood, N. (2004). *Qualitative Methods for Health Research*. London, Sage.

Grimmett, M. R. and Sulmasy, D. P. (1998). The call of the sirens: ethically navigating the sea of nonvalidated therapies. *J Refract Surg* **14**: 559-66.

Hall, C. and Pook, S. (1999). No one told us our babies were in a trial. *The Daily Telegraph*: February 19th, 4.

Halpern, S. D., Karlawish, J. H., Casarett, D., Berlin, J. A., Townsend, R. R. and Asch, D. A. (2003). Hypertensive patients' willingness to participate in placebo-

controlled trials: implications for recruitment efficiency. *Am Heart J* **146**: 985-92.

Hamilton Brown, A. (2004). Integrating research and practice in the CSAT Methamphetamine Treatment Project. *J Subst Abuse Treat* **26**: 103-8.

Hanley, B., Truesdale, A., King, A., Elbourne, D. and Chalmers, I. (2001). Involving consumers in designing, conducting, and interpreting randomised controlled trials: questionnaire survey. *BMJ* **322**: 519-23.

Hellman, S. (1979). Randomized clinical trials and the doctor-patient relationship: an ethical dilemma. *Cancer Clinical Trials* **2**: 189-93.

Hellman, S. and Hellman, D. S. (1991). Of mice but not men. Problems of the randomized clinical trial. *N Engl J Med* **324**: 1585-9.

Henderson, G. E., Davis, A. M., King, N. M., Easter, M. M., Zimmer, C. R., Rothschild, B. B., Wilfond, B. S., Nelson, D. K. and Churchill, L. R. (2004). Uncertain benefit: investigators' views and communications in early phase gene transfer trials. *Mol Ther* **10**: 225-31.

Henzlova, M. J., Blackburn, G. H., Bradley, E. J. and Rogers, W. J. (1994). Patient perception of a long-term clinical trial: experience using a close-out questionnaire in the Studies of Left Ventricular Dysfunction (SOLVD) Trial. SOLVD Close-out Working Group. *Control Clin Trials* **15**: 284-93.

Hey, E. and Chalmers, I. (2000). Investigating allegations of research misconduct: the vital need for due process. *BMJ* **321**: 752-5.

Hilden, J. and Gammelgaard, A. (2002). Premature stopping and informed consent in AMI trials. *J Med Ethics* **28**: 188-9; discussion 90-1.

Hill, A. B. (1963). Medical ethics and controlled trials. *BMJ* **2**.

Hill, A. B. (1966). Reflections on controlled trial. *Ann Rheum Dis* **25**: 107-13.

Hill, A. B. (1990). Suspended judgment. Memories of the British Streptomycin Trial in Tuberculosis. The first randomized clinical trial. *Control Clin Trials* **11**: 77-9.

Hoehn, K. S., Wernovsky, G., Rychik, J., Gaynor, J. W., Spray, T. L., Feudtner, C. and Nelson, R. M. (2005). What factors are important to parents making decisions about neonatal research? *Arch Dis Child Fetal Neonatal Ed* **90**: F267-9.

Horng, S., Emanuel, E. J., Wilfond, B., Rackoff, J., Martz, K. and Grady, C. (2002). Descriptions of benefits and risks in consent forms for phase 1 oncology trials. *N Engl J Med* **347**: 2134-40.

Howard, J. M. and DeMets, D. (1981). How informed is informed consent? The BHAT experience. *Control Clin Trials* **2**: 287-303.

Hunninghake, D. B., Darby, C. A. and Probstfield, J. L. (1987). Recruitment experience in clinical trials: literature summary and annotated bibliography. *Control Clin Trials* **8**: 6S-30S.

Hunt, C. J., Shepherd, L. M. and Andrews, G. (2001). Do doctors know best? Comments on a failed trial. *Med J Aust* **174**: 144-6.

Hutchison, C. (1998). Phase I trials in cancer patients: participants' perceptions. *Eur J Cancer Care (Engl)* **7**: 15-22.

Hutton, J. D., Wilkinson, A. M. and Neale, J. (1990). Poor participation of nulliparous women in a low dose aspirin study to prevent preeclampsia. *N Z Med J* **103**: 511-2.

Ingelfinger, F. J. (1972). Informed (but uneducated) consent. *N Engl J Med* **287**: 465-6.

Institute of Medical Ethics Working Party (1992). AIDS and the ethics of medical care and treatment. Institute of Medical Ethics Working Party on the Ethical Implications of AIDS. *Q J Med* **83**: 419-26.

Israni, A. K., Halpern, S. D., McFadden, C., Israni, R. K., Wasserstein, A., Kobrin, S. and Berns, J. S. (2004). Willingness of dialysis patients to participate in a randomized controlled trial of daily dialysis. *Kidney Int* **65**: 990-8.

Joffe, S., Cook, E. F., Cleary, P. D., Clark, J. W. and Weeks, J. C. (2001). Quality of informed consent in cancer clinical trials: a cross-sectional survey. *Lancet* **358**: 1772-77.

Joffe, S. and Weeks, J. C. (2002). Views of American oncologists about the purposes of clinical trials. *J Natl Cancer Inst* **94**: 1847-53.

Johnson, N., Lilford, R. J. and Brazier, W. (1991). At what level of collective equipoise does a clinical trial become ethical? *J Med Ethics* **17**: 30-4.

Joint Working Party of representatives from the Royal College of Pathologists Royal College of Physicians of London and the Royal College of Surgeons (1991). Report of the Joint Working Party on the Autopsy and Audit. London, Royal College of Pathologists.

Jones, R. (2002). Declining altruism in medicine. *BMJ* **324**: 624-5.

Kass, N. E., Sugarman, J., Faden, R. and Schoch-Spana, M. (1996). Trust, The fragile foundation of contemporary biomedical research. *Hastings Cent Rep* **26**: 25-9.

Katz, J. (1993). "Ethics and clinical research" revisited. A tribute to Henry K. Beecher. *Hastings Cent Rep* **23**: 31-9.

Kenyon, S. and Dixon-Woods, M. (2004). What do they know?: a content analysis of women's perceptions of trial information. *BJOG* **111**: 1341-5.

Kenyon, S. L., Rhodes, A. and Taylor, D. J. (2005). A recipe for successful recruitment to a randomised controlled trial. *MIDIRS Midwifery Digest* **15**: 16-9.

Kenyon, S. L., Taylor, D. J. and Tarnow-Mordi, W. (2001a). Broad-spectrum antibiotics for preterm, prelabour rupture of fetal membranes: the ORACLE I randomised trial. ORACLE Collaborative Group. *Lancet* **357**: 979-88.

Kenyon, S. L., Taylor, D. J. and Tarnow-Mordi, W. (2001b). Broad-spectrum antibiotics for spontaneous preterm labour: the ORACLE II randomised trial. ORACLE Collaborative Group. *Lancet* **357**: 989-94.

Kerr, C. E., Robinson, E. J., Lilford, R. J., Edwards, S. J., Braunholtz, D. A. and Stevens, A. J. (2004). The impact of describing clinical trial treatments as new or standard. *Patient Educ Couns* **53**: 107-13.

Kestin, I. G. (1998). Informed consent. "Technical" consent is inevitable in some circumstances. *Bmj* **317**: 947-8.

Khong, T. Y., Turnbull, D. and Staples, A. (2001). Provider attitudes about gaining consent for perinatal autopsy. *Obstet Gynecol* **97**: 994-8.

Kimmelman, J. and Palmour, N. (2005). Therapeutic optimism in the consent forms of phase 1 gene transfer trials: an empirical analysis. *J Med Ethics* **31**: 209-14.

King, N. M., Henderson, G. E., Churchill, L. R., Davis, A. M., Hull, S. C., Nelson, D. K., Parham-Vetter, P. C., Rothschild, B. B., Easter, M. M. and Wilfond, B. S. (2005). Consent forms and the therapeutic misconception: the example of gene transfer research. *IRB* **27**: 1-8.

Klein, M. C. (1995). Studying episiotomy: when beliefs conflict with science. *J Fam Pract* **41**: 483-8.

Klein, M. C., Kaczorowski, J., Robbins, J. M., Gauthier, R. J., Jorgensen, S. H. and Joshi, A. K. (1995). Physicians' beliefs and behaviour during a randomized controlled trial of episiotomy: consequences for women in their care. *CMAJ* **153**: 769-79.

Kodish, E., Eder, M., Noll, R. B., Ruccione, K., Lange, B., Angiolillo, A., Pentz, R., Zyzanski, S., Siminoff, L. A. and Drotar, D. (2004). Communication of randomization in childhood leukemia trials. *JAMA* **291**: 470-5.

Kodish, E., Lantos, J. D. and Siegler, M. (1991). The ethics of randomization. *CA Cancer J Clin* **41**: 180-6.

Kornblith, A. B., Kemeny, M., Peterson, B. L., Wheeler, J., Crawford, J., Bartlett, N., Fleming, G., Graziano, S., Muss, H. and Cohen, H. J. (2002). Survey of oncologists' perceptions of barriers to accrual of older patients with breast carcinoma to clinical trials. *Cancer* **95**: 989-96.

Kraybill, E. N. (2004). The challenge of informed consent in neonatal research. *J Perinatol* **24**: 407-8.

Kunz, R., Orth, K., Vogel, J., Steinacker, J. M., Meitinger, A., Bruckner, U. and Beger, H. G. (1992). [Laparoscopic cholecystectomy versus mini-lap-cholecystectomy. Results of a prospective, randomized study]. *Chirurg* **63**: 291-5.

Langley, C., Gray, S., Selley, S., Bowie, C. and Price, C. (2000). Clinicians' attitudes to recruitment to randomised trials in cancer care: a qualitative study. *J Health Serv Res Policy* **5**: 164-9.

Langley, G. R., Sutherland, H. J., Wong, S., Minkin, S., Llewellyn-Thomas, H. A. and Till, J. E. (1987). Why are (or are not) patients given the option to enter clinical trials? *Control Clin Trials* **8**: 49-59.

Lantos, J. (1994). Ethics, randomization, and technology assessment. *Cancer* **74**: 2653-6.

Lantos, J. D. (1999). The "inclusion benefit" in clinical trials. *J Pediatr* **134**: 130-1.

Lapsley, P. (2004). Patients in medical education and research. *BMJ* **329**: 334.

Lara, P. N., Jr., Higdon, R., Lim, N., Kwan, K., Tanaka, M., Lau, D. H., Wun, T., Welborn, J., Meyers, F. J., Christensen, S., O'Donnell, R., Richman, C., Scudder, S. A., Tuscano, J., Gandara, D. R. and Lam, K. S. (2001). Prospective evaluation of cancer clinical trial accrual patterns: identifying potential barriers to enrollment. *J Clin Oncol* **19**: 1728-33.

Laupacis, A., Connolly, S. J., Gent, M., Roberts, R. S., Cairns, J. and Joyner, C. (1991). How should results from completed studies influence ongoing clinical trials? The CAFA Study experience. *Ann Intern Med* **115**: 818-22.

Lavender, T. and Walkinshaw, S. A. (1998). Can midwives reduce postpartum psychological morbidity? A randomized trial. *Birth* **25**: 215-9.

Lawton, J., Fox, A., Fox, C. and Kinmonth, A. L. (2003). Participating in the United Kingdom Prospective Diabetes Study (UKPDS): a qualitative study of patients' experiences. *Br J Gen Pract* **53**: 394-8.

Lee, R. (1993). *Doing Research on Sensitive Topics*. London, Sage.

Lefering, R. and Neugebager, E. (1997). *Problems of randomized controlled trials (RCT) in surgery*. Nonrandomized Comparative Clinical Studies. http://www.symposion.com/nrccs/lefering.htm, Heidelberg.

Levene, M., Wright, I. and Griffiths, G. (1996). Is informed consent in neonatal randomised controlled trials ritual? *Lancet* **347**: 475.

Levine, R. J. (1992). Clinical trials and physicians as double agents. *Yale J Biol Med* **65**: 65-74.

Leyder, D. (1998). *Linking Theory and Social Research*. London, Sage.

Lidz, C. W., Appelbaum, P. S., Grisso, T. and Renaud, M. (2004). Therapeutic misconception and the appreciation of risks in clinical trials. *Soc Sci Med* **58**: 1689-97.

Lilford, R. J. (2001). Equipoise is not synonymous with uncertainity. *BMJ* **323**: 574.

Lilford, R. J. (2003). Ethics of clinical trials from a bayesian and decision analytic perspective: whose equipoise is it anyway? *BMJ* **326**: 980-1.

Lilford, R. J. and Jackson, J. (1995). Equipoise and the ethics of randomization. *J R Soc Med* **88**: 552-9.

Little, M. (2003). 'Better than numbers...' A gentle critique of evidence-based medicine. *ANZ J Surg* **73**: 177-82; discussion 82.

Llewellyn-Thomas, H. A., McGreal, M. J., Thiel, E. C., Fine, S. and Erlichman, C. (1991). Patients' willingness to enter clinical trials: measuring the association with perceived benefit and preference for decision participation. *Soc Sci Med* **32**: 35-42.

Loughrey, M. B., McCluggage, W. G. and Toner, P. G. (2000). The declining autopsy rate and clinicians' attitudes. *Ulster Med J* **69**: 83-9.

Lumley, J., Lester, A., Renou, P. and Wood, C. (1985). A failed RCT to determine the best method of delivery for very low birth weight infants. *Control Clin Trials* **6**: 120-7.

Manning, D. J. (2000). Presumed consent in emergency neonatal research. *J Med Ethics* **26**: 249-53.

Marsden, J. and Bradburn, J. (2004). Patient and clinician collaboration in the design of a national randomized breast cancer trial. *Health Expect* **7**: 6-17.

Mason, S. (1997). Obtaining informed consent for neonatal randomised controlled trials - an "elaborate ritual"? *Arch Dis Child Fetal Neonatal Ed* **76**: F143-5.

Mason, S. A. and Allmark, P. J. (2000). Obtaining informed consent to neonatal randomised controlled trials: interviews with parents and clinicians in the Euricon study. *Lancet* **356**: 2045-51.

Mastwyk, M., Macfarlane, S., LoGiudice, D. and Sullivan, K. A. (2003). Why participate in an Alzheimer's disease clinical trial? Is it of benefit to carers and patients? *Int Psychogeriatr* **15**: 149-56.

Mattson, M. E., Curb, J. D. and McArdle, R. (1985). Participation in a clinical trial: the patients' point of view. *Control Clin Trials* **6**: 156-67.

McAuliffe, W. E. and Ashery, R. S. (1993). Implementation issues and techniques in randomized trials of outpatient psychosocial treatments for drug abusers. II. Clinical and administrative issues. *Am J Drug Alcohol Abuse* **19**: 35-50.

McHaffie, H. E., Fowlie, P. W., Hume, R., Laing, I. A., Lloyd, D. J. and Lyon, A. J. (2001). Consent to autopsy for neonates. *Arch Dis Child Fetal Neonatal Ed* **85**: F4-7.

McIntosh, N. (1993). Informed consent in clinical trials. Strengthen ethical committees' role. *BMJ* **307**: 1496.

McKinley, R. K., Stevenson, K., Adams, S. and Manku-Scott, T. K. (2002). Meeting patient expectations of care: the major determinant of satisfaction with out-of-hours primary medical care? *Fam Pract* **19**: 333-8.

McLeod, L., Barrett, J., Hewson, S. and Hannah, M. E. (2004). Women's views regarding participation in a proposed randomized controlled trial of twin delivery. *J Obstet Gynaecol Can* **26**: 575-9.

McLeod, R. S. (1999). Issues in surgical randomized controlled trials. *World J Surg* **23**: 1210-4.

McNutt, R. A. (2004). Shared medical decision making: problems, process, progress. *JAMA* **292**: 2516-8.

McPhee, S. J. (1996). Maximizing the benefits of autopsy for clinicians and families. What needs to be done. *Arch Pathol Lab Med* **120**: 743-8.

McPhee, S. J., Bottles, K., Lo, B., Saika, G. and Crommie, D. (1986). To redeem them from death. Reactions of family members to autopsy. *Am J Med* **80**: 665-71.

Medical Research Council (2003). *Clinical Trials for Tomorrow. An MRC Review of Randomized Controlled Trials*. London, MRC Clinical Trials Series.

Menikoff, J. (2003). Equipoise: beyond rehabilitation? *Kennedy Inst Ethics J* **13**: 347-51.

Merigan, T. C. (1990). You can teach an old dog new tricks. How AIDS trials are pioneering new strategies. *N Engl J Med* **323**: 1341-3.

Meropol, N. J., Weinfurt, K. P., Burnett, C. B., Balshem, A., Benson, A. B., 3rd, Castel, L., Corbett, S., Diefenbach, M., Gaskin, D., Li, Y., Manne, S., Marshall, J., Rowland, J. H., Slater, E., Sulmasy, D. P., Van Echo, D., Washington, S. and Schulman, K. A. (2003). Perceptions of patients and physicians regarding phase I cancer clinical trials: implications for physician-patient communication. *J Clin Oncol* **21**: 2589-96.

Mettlin, C., Cummings, K. M. and Walsh, D. (1985). Risk factor and behavioral correlates of willingness to participate in cancer prevention trials. *Nutr Cancer* **7**: 189-98.

Miles, M. S., Funk, S. G. and Kasper, M. A. (1991). The neonatal intensive care unit environment: sources of stress for parents. *AACN Clin Issues Crit Care Nurs* **2**: 346-54.

Millat, B., Fingerhut, A., Flamant, Y., Hay, J. M., Fagniez, P. L., Farah, A., Duron, J. J. and Courchevel, J. M. (1999). Survey of the impact of randomised clinical trials on surgical practice in France. French Associations for Research in Surgery (AURC and ACAPEM). Association Universitaire de Recherche en Chirurgie. Association des Chirurgiens de l'Assistance Publique pour l'Evaluation Medicale. *Eur J Surg* **165**: 87-94.

Miller, F. G. and Brody, H. (2003). A critique of clinical equipoise. Therapeutic misconception in the ethics of clinical trials. *Hastings Cent Rep* **33**: 19-28.

Miller, F. G. and Rosenstein, D. L. (2003). The therapeutic orientation to clinical trials. *New England J Med* **348**: 1383-86.

Miller, F. G., Rosenstein, D. L. and DeRenzo, E. G. (1998). Professional integrity in clinical research. *Jama* **280**: 1449-54.

Miller, J. D., Coughlin, M. D., Edey, L., Miller, P. and Sivji, Y. (2000). Equipoise and the ethics of the Canadian Lung Volume Reduction Surgery Trial study: should there be a randomized, controlled trial to evaluate lung volume reduction surgery? *Can Respir J* **7**: 329-32.

Miller, V. A., Drotar, D., Burant, C. and Kodish, E. (2005). Clinician-parent communication during informed consent for pediatric leukemia trials. *J Pediatr Psychol* **30**: 219-29.

Mills, N., Donovan, J. L., Smith, M., Jacoby, A., Neal, D. E. and Hamdy, F. C. (2003). Perceptions of equipoise are crucial to trial participation: a qualitative study of men in the ProtecT study. *Control Clin Trials* **24**: 272-82.

Minogue, B. P., Palmer-Fernandez, G., Udell, L. and Waller, B. N. (1995). Individual autonomy and the double-blind controlled experiment: the case of desperate volunteers. *J Med Philos* **20**: 43-55.

Mirken, B. (1995). AIDS clinical trials: Why they have recruiting problems. *AIDS Treatment News* **Issue #217**: February 17. http://www.aids.org/atn/a-217-05.html.

Moran, S. (1993). A difficult decision. *New Generation*: December 26.

Morley, C. J., Lau, R., Davis, P. G. and Morse, C. (2005). What do parents think about enrolling their premature babies in several research studies? *Arch Dis Child Fetal Neonatal Ed* **90**: F225-8.

Morris, S. M. (2001). Joint and individual interviewing in the context of cancer. *Qual Health Res* **11**: 553-67.

Murray, B. L. (2003). Qualitative research interviews: therapeutic benefits for the participants. *J Psychiatr Ment Health Nurs* **10**: 233-6.

National Bioethics Advisory Commission (2001). *Ethical and policy issues in international research: clinical trials in developing countries, p.48.* Bethesda, MA, National Bioethics Advisory Commission.

NHS Executive West Midlands Regional Office (2000). Report of a review of the research framework in North Staffordshire Hospital NHS Trust (Griffiths report). Leeds, NHS Executive.

Nicholl, R. (2002). Nitric oxide in preterm babies. *Arch Dis Child* **86**: 59-60.

Novack, D. H., Suchman, A. L., Clark, W., Epstein, R. M., Najberg, E. and Kaplan, C. (1997). Calibrating the physician. Personal awareness and effective patient care. Working Group on Promoting Physician Personal Awareness, American Academy on Physician and Patient. *JAMA* **278**: 502-9.

Oakley, A. (1992). *Social Support and Motherhood.* Oxford, Blackwell.

Oakley, A. (2000). *Experiments in Knowing: Gender and Method in the Social Sciences.* Cambridge, Polity Press.

Oliver, S., Clarke-Jones, L., Rees, R., Milne, R., Buchanan, P., Gabbay, J., Gyte, G., Oakley, A. and Stein, K. (2004). Involving consumers in research and development agenda setting for the NHS: developing an evidence-based approach. *Health Technol Assess* **8**: 1-148, III-IV.

Penn, Z. J. and Steer, P. J. (1990). Reasons for declining participation in a prospective randomized trial to determine the optimum mode of delivery of the preterm breech. *Control Clin Trials* **11**: 226-31.

Pentz, R. D., Flamm, A. L., Sugarman, J., Cohen, M. Z., Daniel Ayers, G., Herbst, R. S. and Abbruzzese, J. L. (2002). Study of the media's potential influence on prospective research participants' understanding of and motivations for participation in a high-profile phase I trial. *J Clin Oncol* **20**: 3785-91.

Phillips, B. (2004). Towards evidence based medicine for paediatricians. *Arch Dis Child* **89**: 683-4.

Plaisier, P. W., Berger, M. Y., van der Hul, R. L., Nijs, H. G., den Toom, R., Terpstra, O. T. and Bruining, H. A. (1994). Unexpected difficulties in randomizing patients in a surgical trial: a prospective study comparing extracorporeal shock wave lithotripsy with open cholecystectomy. *World J Surg* **18**: 769-72; discussion 73.

Pocock, S. J. (1995). *Clinical Trials: A Practical Approach.* Chicester, John Wiley and Son.

Pope, C. and Mays, N. (1995a). Qualitative research: Reaching the parts other methods cannot reach: an introduction to qualitative methods in health and health services research. *BMJ* **311**: 42-5.

Pope, C. and Mays, N. (1995b). Qualitative research: Rigour and qualitative research. *BMJ* **311**: 109-12.

Priest, S. R., Henderson, J., Evans, S. F. and Hagan, R. (2003). Stress debriefing after childbirth: a randomised controlled trial. *Med J Aust* **178**: 542-5.

Prout, H., Butler, C., Kinnersley, P., Robling, M., Hood, K. and Tudor-Jones, R. (2003). A qualitative evaluation of implementing a randomized controlled trial in general practice. *Fam Pract* **20**: 675-81.

Prout, T. E. (1979). Patient recruitment: other examples of recruitment problems and solutions. *Clin Pharmacol Ther* **25**: 695-6.

Rabinovitch, D. (2004). The enemy within. *The Guardian*: Tuesday November 16.

Rankin, J., Wright, C. and Lind, T. (2002). Cross sectional survey of parents' experience and views of the postmortem examination. *BMJ* **324**: 816-8.

Reiser, J. and Warner, J. O. (1985). The value of participating in an asthma trial. *Lancet* **1**: 206-7.

Renfrew, M. J. and McCandlish, R. (1992). With women: new steps in research in midwifery. In H. Roberts, Ed. *Women's Health Matters*. 81-98. London: Routledge.

Roberts, I., Yates, D., Sandercock, P., Farrell, B., Wasserberg, J., Lomas, G., Cottingham, R., Svoboda, P., Brayley, N., Mazairac, G., Laloe, V., Munoz-Sanchez, A., Arango, M., Hartzenberg, B., Khamis, H., Yutthakasemsunt, S., Komolafe, E., Olldashi, F., Yadav, Y., Murillo-Cabezas, F., Shakur, H. and Edwards, P. (2004). Effect of intravenous corticosteroids on death within 14 days in 10008 adults with clinically significant head injury (MRC CRASH trial): randomised placebo-controlled trial. *Lancet* **364**: 1321-8.

Rogers, A., Day, J., Randall, F. and Bentall, R. P. (2003). Patients' understanding and participation in a trial designed to improve the management of anti-psychotic medication: a qualitative study. *Soc Psychiatry Psychiatr Epidemiol* **38**: 720-7.

Rose, G., Robinson, R. and Tooley, J. R. (2005). The perinatal postmortem: dispelling the myths. *ADC* **90 (suppl II)**: A13.

Ross, S., Grant, A., Counsell, C., Gillespie, W., Russell, I. and Prescott, R. (1999). Barriers to participation in randomised controlled trials: a systematic review. *J Clin Epidemiol* **52**: 1143-56.

Ryan, L. (1995). 'Going public' and 'watching sick people' - the clinic setting as a factor in the experiences of gay men participating in AIDS clinical trials. *AIDS Care* **7**: 147-58.

Sackett, D. L. (2000). Equipoise, a term whose time (if it ever came) has surely gone. *CMAJ* **163**: 835-6.

Sackett, D. L., Rosenberg, W. M., Gray, J. A., Haynes, R. B. and Richardson, W. S. (1996). Evidence based medicine: what it is and what it isn't. *BMJ* **312**: 71-2.

Sanner, M. A. (1994). In perspective of the declining autopsy rate. Attitudes of the public. *Arch Pathol Lab Med* **118**: 878-83.

Saurbrey, N., Jensen, J., Elmegaard Rasmussen, P., Gjorup, T., Guldager, H. and Riis, P. (1984). Danish patients' attitudes to scientific-ethical questions. An interview study focusing therapeutic trials. *Acta Med Scand* **215**: 99-104.

Schafer, A. (1982). The ethics of the randomized clinical trial. *N Engl J Med* **307**: 719-24.

Schmidt, B., Gillie, P., Caco, C., Roberts, J. and Roberts, R. (1999). Do sick newborn infants benefit from participation in a randomized clinical trial? *J Pediatr* **134**: 151-5.

Schulz, K. F. (1995a). Unbiased research and the human spirit: the challenges of randomized controlled trials. *CMAJ* **153**: 783-6.

Schulz, K. F. (1995b). Subverting randomization in controlled trials. *JAMA* **274**: 1456-8.

Schutta, K. M. and Burnett, C. B. (2000). Factors that influence a patient's decision to participate in a phase I cancer clinical trial. *Oncol Nurs Forum* **27**: 1435-8.

Segelov, E., Tattersall, M. H. and Coates, A. S. (1992). Redressing the balance - the ethics of not entering an eligible patient on a randomised clinical trial. *Ann Oncol* **3**: 103-5.

Seymour, J., dix, G. and Eardley, T., Eds. (1995). *Joint Accounts: methodology and practice in research interviews with couples*. University of York: Social Policy Research Unit.

Shapiro, S. H. and Glass, K. C. (2000). Why Sackett's analysis of randomized controlled trials fails, but needn't. *CMAJ* **163**: 834-5.

Sharp, H. M. and Orr, R. D. (2004). When "minimal risk" research yields clinically-significant data, maybe the risks aren't so minimal. *Am J Bioeth* **4**: W32-6.

Shields-Poe, D. and Pinelli, J. (1997). Variables associated with parental stress in neonatal intensive care units. *Neonatal Netw* **16**: 29-37.

Silverman, W. A. (1980). *Retrolental Fibroplasia: A modern parable*. London, Grune and Stratton.

Silverman, W. A. (1987). *Human Experimentation: A guided step into the unknown*. Oxford, OUP.

Silverman, W. A. (1997). Equitable distribution of the risks and benefits associated with medical innovations. In A. Maynard and I. Chalmers, Eds. *Non-random Reflections on Health Services Research: On the 25th anniversary of Archie Cochrane's Effectiveness and Efficiency*. 184-93. London: BMJ Publishing.

Silverman, W. A. (2004). Personal reflections on lessons learned from randomized trials involving newborn infants from 1951 to 1967. *Clinical Trials* **1**: 179-84(6).

Silverman, W. A. and Chalmers, I. (1992). Sir Austin Bradford Hill: an appreciation. *Control Clin Trials* **13**: 100-5.

Simes, R. J., Tattersall, M. H., Coates, A. S., Raghavan, D., Solomon, H. J. and Smartt, H. (1986). Randomised comparison of procedures for obtaining informed consent in clinical trials of treatment for cancer. *Br Med J (Clin Res Ed)* **293**: 1065-8.

Siminoff, L. A., Zhang, A., Colabianchi, N., Sturm, C. M. and Shen, Q. (2000). Factors that predict the referral of breast cancer patients onto clinical trials by their surgeons and medical oncologists. *J Clin Oncol* **18**: 1203-11.

Simon, C. (2002). Child assent and parental permission for clinical research - some considerations. *Bioethics Forum* **18**: 36-42.

Simon, M. S., Du, W., Flaherty, L., Philip, P. A., Lorusso, P., Miree, C., Smith, D. and Brown, D. R. (2004). Factors associated with breast cancer clinical trials participation and enrollment at a large academic medical center. *J Clin Oncol* **22**: 2046-52. Epub 04.

Simone, J. V. (2003). Childhood leukemia - successes and challenges for survivors. *N Engl J Med* **349**: 627-8.

Singhal, N., Oberle, K., Burgess, E. and Huber-Okrainec, J. (2002). Parents' perceptions of research with newborns. *J Perinatol* **22**: 57-63.

Skrutkowska, M. and Weijer, C. (1997). Do patients with breast cancer participating in clinical trials receive better nursing care? *Oncol Nurs Forum* **24**: 1411-6.

Slevin, M., Mossman, J., Bowling, A., Leonard, R., Steward, W., Harper, P., McIllmurray, M. and Thatcher, N. (1995). Volunteers or victims: patients' views of randomised cancer clinical trials. *Br J Cancer* **71**: 1270-4.

Smith, T. L., Lee, J. J., Kantarjian, H. M., Legha, S. S. and Raber, M. N. (1996). Design and results of phase I cancer clinical trials: three-year experience at M.D. Anderson Cancer Center. *J Clin Oncol* **14**: 287-95.

Snowdon, C., Elbourne, D. and Garcia, J. (1999). Zelen randomization: attitudes of parents participating in a neonatal clinical trial. *Control Clin Trials* **20**: 149-71.

Snowdon, C., Elbourne, D. and Garcia, J. (2004). Embedding a qualitative approach in a qualitative framework: an example in a sensitive setting. In T. Lavender, G. Edwards and Z. Alfirevic, Eds. *Demystifying Qualitative Research in Pregnancy and Childbirth*. Salisbury: Quay Books.

Snowdon, C., Elbourne, D. R. and Garcia, J. (2004). Perinatal pathology in the context of a clinical trial: a review of the literature. *Arch Dis Child Fetal Neonatal Ed* **89**: F200-3.

Snowdon, C., Elbourne, D. R. and Garcia, J. (2004). Perinatal pathology in the context of a clinical trial: attitudes of bereaved parents. *Arch Dis Child Fetal Neonatal Ed* **89**: F208-11.

Snowdon, C., Elbourne, D. R. and Garcia, J. (2004). Perinatal pathology in the context of a clinical trial: attitudes of neonatologists and pathologists. *Arch Dis Child Fetal Neonatal Ed* **89**: F204-7.

Snowdon, C., Garcia, J. and Elbourne, D. (1997). Making sense of randomization; responses of parents of critically ill babies to random allocation of treatment in a clinical trial. *Soc Sci Med* **45**: 1337-55.

Snowdon, C., Garcia, J. and Elbourne, D. (1998). Reactions of participants to the results of a randomised controlled trial: exploratory study. *BMJ* **317**: 21-6.

Snowdon, C., Garcia, J. and Elbourne, D. (2002). Decisions, decisions: How do parents view the decision they made about a randomized clinical trial? In K. W. M. Fullford, D. L. Dickenson and T. Murray, Eds. *Healthcare Ethics and Human Values: An introductory text with readings and case studies*. 261-9. Oxford: Blackwell.

Solomon, M. J. and McLeod, R. S. (1995). Should we be performing more randomized controlled trials evaluating surgical operations? *Surgery* **118**: 459-67.

Solomon, M. J., Pager, C. K., Young, J. M., Roberts, R. and Butow, P. (2003). Patient entry into randomized controlled trials of colorectal cancer treatment: factors influencing participation. *Surgery* **133**: 608-13.

Spodick, D. H. (1983). Randomize the first patient: scientific, ethical, and behavioral bases. *Am J Cardiol* **51**: 916-7.

Starzl, T. E. (1985). Protecting the patient's interest. *Kidney Int Suppl* **17**: S31-3.

Stenson, B. J., Becher, J. C. and McIntosh, N. (2004). Neonatal research: the parental perspective. *Arch Dis Child Fetal Neonatal Ed* **89**: F321-3.

Stirrat, G. M., Farrow, S. C., Farndon, J. and Dwyer, N. (1992). The challenge of evaluating surgical procedures. *Ann R Coll Surg Engl* **74**: 80-4.

Stolman, C. J., Castello, F., Yorio, M. and Mautone, S. (1994). Attitudes of pediatricians and pediatric residents toward obtaining permission for autopsy. *Arch Pediatr Adolesc Med* **148**: 843-7.

Streptomycin in Tuberculosis Trials Committee (1948). Streptomycin treatment of pulmonary tuberculosis. *BMJ* **2**: 769-82.

Sugarman, J., Lavori, P. W., Boeger, M., Cain, C., Edson, R., Morrison, V. and Shing, Y. S. (2005). Evaluating the quality of informed consent. *Clinical Trials* **2**: 34-41.

Taylor, K. M. (1988). "Telling bad news": physicians and the disclosure of undesirable information. *Sociol Health Illn* **10**: 109-32.

Taylor, K. M. (1992). Integrating conflicting professional roles: physician participation in randomized clinical trials. *Soc Sci Med* **35**: 217-24.

Taylor, K. M., Feldstein, M. L., Skeel, R. T., Pandya, K. J., Ng, P. and Carbone, P. P. (1994). Fundamental dilemmas of the randomized clinical trial process: results of a survey of the 1,737 Eastern Cooperative Oncology Group investigators. *J Clin Oncol* **12**: 1796-805.

Taylor, K. M. and Kelner, M. (1987). Informed consent: the physician's perspective. *Soc Sci Med* **24**: 135-43.

Taylor, K. M. and Kelner, M. (1987). Interpreting physician participation in randomized clinical trials: the physician orientation profile. *J Health Soc Behaviour* **28**: 389-400.

Taylor, K. M., Margolese, R. G. and Soskolne, C. L. (1984). Physicians' reasons for not entering eligible patients in a randomized clinical trial of surgery for breast cancer. *N Engl J Med* **310**: 1363-7.

The Neonatal Inhaled Nitric Oxide Study Group (2000). Inhaled nitric oxide in term and near-term infants: neurodevelopmental follow-up of the neonatal inhaled nitric oxide study group (NINOS). *J Pediatr* **136**: 611-7.

Thornton, H. (1994). Clinical trials - a brave new partnership? *J Med Ethics* **20**: 19-22; discussion 3-5.

Tobias, J. S. and Souhami, R. L. (1993). Fully informed consent can be needlessly cruel. *BMJ* **307**: 1199-201.

Tognoni, G., Alli, C., Avanzini, F., Bettelli, G., Colombo, F., Corso, R., Marchioli, R. and Zussino, A. (1991). Randomised clinical trials in general practice: lessons from a failure. *BMJ* **303**: 969-71.

Trimble, E. L., Winchester, D. P. and Niederhuber, J. E. (1992). The attitudes of surgeons toward clinical trials. *Bull Am Coll Surg* **77**: 23-8.

Truog, R. D. (1993). Randomized controlled trials of potentially life-saving therapies: are they ethical? *Coron Artery Dis* **4**: 835-6.

UK Collaborative ECMO Trial Group (1996). UK collaborative randomised trial of neonatal extracorporeal membrane oxygenation. *Lancet* **348**: 75-82.

van Bergen, P. F., Jonker, J. J., Molhoek, G. P., van der Burgh, P. H., van Domburg, R. T., Deckers, J. W. and Hofman, A. (1995). Characteristics and prognosis of non-participants of a multi-centre trial of long-term anticoagulant treatment after myocardial infarction. *Int J Cardiol* **49**: 135-41.

van der Windt, D. A., Koes, B. W., van Aarst, M., Heemskerk, M. A. and Bouter, L. M. (2000). Practical aspects of conducting a pragmatic randomised trial in primary care: patient recruitment and outcome assessment. *Br J Gen Pract* **50**: 371-4.

VanMarter, L. J., Taylor, F. and Epstein, M. F. (1987). Parental and physician-related determinants of consent for neonatal autopsy. *Am J Dis Child* **141**: 149-53.

Vickers, M., Meade, T. and Darbyshire, J. (2002). WISDOM: history and early demise - was it inevitable? *Climacteric* **5**: 317-25.

Vitiello, B., Aman, M. G., Scahill, L., McCracken, J. T., McDougle, C. J., Tierney, E., Davies, M. and Arnold, L. E. (2005). Research knowledge among parents of children participating in a randomized clinical trial. *J Am Acad Child Adolesc Psychiatry* **44**: 145-9.

Volavka, J., Cooper, T. B., Laska, E. M. and Meisner, M. (1996). Placebo washout in trials of antipsychotic drugs. *Schizophr Bull* **22**: 567-76.

Von Hoff, D. D. and Turner, J. (1991). Response rates, duration of response, and dose response effects in phase I studies of antineoplastics. *Invest New Drugs* **9**: 115-22.

Walterspiel, J. N. (1990). Informed consent: influence on patient selection among critically ill premature infants. *Pediatrics* **85**: 119-21.

Weijer, C., Shapiro, S. H. and Cranley Glass, K. (2000). For and against: clinical equipoise and not the uncertainty principle is the moral underpinning of the randomised controlled trial. *BMJ* **321**: 756-8.

Weinberg, A. D., Cooper, H. P., Mejia, N. I. and Spiker, C. A. (2004). Attitudes of primary care physicians and specialists about cancer clinical trials: a survey of Texas physicians. *Tex Med* **100**: 66-72.

Weinfurt, K. P., Sulmasy, D. P., Schulman, K. A. and Meropol, N. J. (2003). Patient expectations of benefit from phase I clinical trials: linguistic considerations in diagnosing a therapeutic misconception. *Theor Med Bioeth* **24**: 329-44.

Wendler, D. and Rackoff, J. (2002). Consent for continuing research participation: what is it and when should it be obtained? *IRB: Ethics and Human Research* **24**: 1-6.

Williams, B. F., French, J. K. and White, H. D. (2003). Informed consent during the clinical emergency of acute myocardial infarction (HERO-2 consent substudy): a prospective observational study. *Lancet* **361**: 918-22.

Williams, R. M., Thom, M. H. and Studd, J. W. (1980). A study of the benefits and acceptability of ambulation in spontaneous labour. *Br J Obstet Gynaecol* **87**: 122-6.

Williams, S., Weinman, J., Dale, J. and Newman, S. (1995). Patient expectations: what do primary care patients want from the GP and how far does meeting expectations affect patient satisfaction? *Fam Pract* **12**: 193-201.

Wilson, E. (1999). They used our babies and never told us. *Daily Mail*: February 19, 1.

Wlodaver, C. G. (1994). Why have autopsies grown so unpopular and what can we do about it? The clinical-pathological conference! *J Okla State Med Assoc* **87**: 351.

World Medical Association (2004). World Medical Association Declaration of Helsinki: ethical principles for medical research involving human subjects. *J Int Bioethique* **15**: 124-9.

Wright, J. R., Crooks, D., Ellis, P. M., Mings, D. and Whelan, T. J. (2002). Factors that influence the recruitment of patients to Phase III studies in oncology: the perspective of the clinical research associate. *Cancer* **95**: 1584-91.

Wynne, A. (1989). Is it any good? The evaluation of therapy by participants in a clinical trial. *Soc Sci Med* **29**: 1289-97.

Yao, Q. and Wei, L. J. (1996). Play the winner for phase II/III clinical trials. *Stat Med* **15**: 2413-23; discussion 55-8.

Yates, J. I. (2003). Clinicians in community practice are major contributors to clinical trials in cancer prevention, early detection, and treatment. *CA Cancer J Clin* **53**: 69-72.

Young, J., Harrison, J., White, G., May, J. and Solomon, M. (2004). Developing measures of surgeons' equipoise to assess the feasibility of randomized controlled trials in vascular surgery. *Surgery* **136**: 1070-6.

Yuval, R., Halon, D. A., Merdler, A., Khader, N., Karkabi, B., Uziel, K. and Lewis, B. S. (2000). Patient comprehension and reaction to participating in a double-blind randomized clinical trial (ISIS-4) in acute myocardial infarction. *Arch Intern Med* **160**: 1142-6.

Zajicek, G. (1995). Medical ethics - two codes of ethics in medicine. *The Cancer Journal* **8**: (http://www.tribunes.com/tribune/edito/8-5z.htm).

Zelen, M. (1979). A new design for randomized clinical trials. *N Engl J Med* **300**: 1242-5.

Zelen, M. (1990). Randomized consent designs for clinical trials: an update. *Stat Med* **9**: 645-56.

Zelen, M. (1997). Statistical options in clinical trials. *Semin Oncol* **5**: 441-6.

Zupancic, J. A., Gillie, P., Streiner, D. L., Watts, J. L. and Schmidt, B. (1997). Determinants of parental authorization for involvement of newborn infants in clinical trials. *Pediatrics* **99**: E6.

Appendices

Appendix A – Publication arising from the Study of Views of Participants in Perinatal Trials 285
Appendix B – Publication of results of the INNOVO Trial 318
Appendix C – Publication of results of the CANDA Trial 330
Appendix D – Multi-centre Research Ethics Committee Approval 337
Appendix E – Correspondence relating to tape-recording discussions between neonatologists and parents 340
Appendix F - Parental information sheet for the CANDA Trial 348
Appendix G - Parental information sheet for the INNOVO Trial 351
Appendix H – Literature relating to interviews with neonatologists 354
Appendix I – Literature relating to interviews with parents 364

Appendix A – Publication arising from the Study of Views of Participants in Perinatal Trials

1. Snowdon, C., Elbourne, D. R. and Garcia, J. (2004). Perinatal pathology in the context of a clinical trial: a review of the literature. *Arch Dis Child Fetal Neonatal Ed* 89: F200-3.

2. Snowdon, C., Elbourne, D. R. and Garcia, J. (2004). Perinatal pathology in the context of a clinical trial: attitudes of neonatologists and pathologists. *Arch Dis Child Fetal Neonatal Ed* 89: F204-7.

3. Snowdon, C., Elbourne, D. R. and Garcia, J. (2004). Perinatal pathology in the context of a clinical trial: attitudes of bereaved parents. *Arch Dis Child Fetal Neonatal Ed* 89: F208-11.

4. Snowdon, C., Elbourne, D. and Garcia, J. (2004). Embedding a qualitative approach in a qualitative framework: an example in a sensitive setting. In T. Lavender, G. Edwards and Z. Alfirevic, Eds. *Demystifying Qualitative Research in Pregnancy and Childbirth.* Salisbury: Quay Books.

5. Garcia, J., Elbourne, D. and Snowdon, C. (2004). Equipoise: A case study of the views of clinicians involved in two neonatal trials. *Clin Trials* 1: 170-8.

REVIEW

Perinatal pathology in the context of a clinical trial: a review of the literature

C Snowdon, D R Elbourne, J Garcia

Arch Dis Child Fetal Neonatal Ed 2004;89:F200–F203. doi: 10.1136/adc.2003.012740

Perinatal postmortem rates are declining world wide. In the United Kingdom, perinatal pathology has recently been seriously undermined by controversy. There are important consequences for perinatal trials that include pathology studies. This review looks at the reasons for the decline in perinatal postmortem examinations and the effects on research.

Despite the widely acknowledged value of the postmortem examination (PM), there has been a sustained decline in PM rates around the world.[1-6] Although perinatal PM rates are higher than rates of PM in other contexts,[7] they are considered to be suboptimal[8] and are following this downward trend.[9 10] This is in spite of the fact that they are of particular value in several ways. As well as offering parents information about the cause of death of a baby and so a degree of closure, their value lies in giving information for subsequent pregnancies, their role in audit, and in being an important research tool.[11 12]

> "A degree of altruism is required of parents who are in the most stressful of circumstances, and benefits to research may not seem important at that time."

As perinatal PMs can provide crucial empirical data, in research terms this decline is worrisome. Without pathology studies, perinatal trials cannot assess the possible impact an intervention has had on those who have died. With assessment incomplete, potentially serious consequences of an experimental treatment could go undetected. It is therefore important that, when babies who have been enrolled in a trial do go on to die, parents should be asked about the possibility of a PM. This is, however, a complicating element in an already difficult situation. A degree of altruism is reqired of parents who are in the most stressful of circumstances, and benefits to research may not seem important at that time. Their doctors may be uncomfortable requesting such altruism from them. Given declining consent rates for perinatal PMs generally, it does seem that most parents are either declining or are not being approached for permission. This is already having a tangible effect on research.[13a] A UK consultant perinatal histopathologist is quoted as saying "Consent for the use of tissues for research is about 10%. In the past it would be unusual for anybody to refuse."[13] Pathology studies with inadequate numbers are unreliable, and so this decline clearly has important consequences for the quality and integrity of data.

Low rates of perinatal PMs are likely to be a product of highly interrelated factors. A number of studies have examined clinical and other characteristics of babies and mothers to assess any links with PM rates. It has been shown that prematurity,[7 10 14 15] lower birth weight,[10] and a specific diagnosis—for example, birth asphyxia[14] and congenital anomaly[15]—are all associated with a PM not being performed. Separation of mother and baby through hospital transfer[14] is also associated with no PM. Studies found no significant association between no PM and basic characteristics of the infant (birth hospital, age at death, birth and death weight, race, sex, year of death)[10] or of the mother (age, religion, gravidity),[7] except for lower parity[10] and fewer perinatal losses.[15] These studies have not addressed the contribution of parental and professional views.

In recent times several important social and political factors are also likely to have exacerbated the problem. Perinatal pathology as a specialty is said to be undergoing a period of crisis. There are now few experienced perinatal pathologists in post, insufficient numbers of PMs to retain specialised skills, and few new recruits to the specialty.[13 17] Furthermore, two relevant areas of concern have been raised in the United Kingdom; firstly, there have been governmental inquiries after revelations about the lack of consent for retention of children's organs after PMs at Bristol Royal Infirmary[18] and Alder Hey Children's Hospital in Liverpool[19] and secondly, there have been accusations[20 21] and refutations[22] of misconduct with reference to consent for procedures in perinatal research in the CNEP Trial at North Stafford Hospital.[23] It is against this highly sensitive background, in "a time of unprecedented mistrust between the medical profession, the public, and the media",[24] that all UK discussions about PMs are taking place.

> "An obvious tension lies between informing the parents of difficult details and managing the request with the sensitivity it deserves."

These concerns have contributed to the recent shift in clinical practice towards detailed consent forms, which now explicitly request permission for aspects of the PM that parents may not previously have considered. Requests for removal

See end of article for authors' affiliations

Correspondence to: C Snowdon, Centre for Family Research, University of Cambridge, Free School Lane, Cambridge CB2 3RF, UK; cms1000@cam.ac.uk

Accepted 2 October 2003

and retention of whole organs, decisions over methods of sampling, and decisions over subsequent disposal of body parts, has rendered the consent process "a legalistic and clerical business".[25] An obvious tension lies between informing the parents of difficult details and managing the request with the sensitivity it deserves. Recent discussions about the management of consent for PMs have focused on who should raise the issue of the PM with newly bereaved parents and how those discussions should be handled.[25 26 26a]

In attempts to improve PM rates generally, there has been much interest in charting knowledge of, and reactions to, PMs outside of the perinatal context. There have been various surveys of the attitudes of professionals, such as hospital doctors,[6 26-29] junior doctors,[30 31] general practitioners,[28] medical students,[32 33] and nurses.[34] Perceptions of difficulties with the consent process have been shown to be an important block to offering a PM,[6 27 29] as is degree of certainty over the cause of death[26 29] and increasing age of the patient.[27 29] Although hospital clinicians, general practitioners,[28] junior doctors,[31] and nurses[34] are shown to have positive views of the value of the PM, junior staff in one study were unaware of the benefits.[30]

"Clarifying the cause of death was also important, as was gaining reassurance from the results."

The views of bereaved relatives[33-36] have also been sought. When relatives had consented to a PM, the most common reasons given were altruistic, that is the advancement of science[33 34] and to help others.[35] Clarifying the cause of death was also important,[33-35] as was gaining reassurance from the results.[33 36] Reasons for refusal were concerns over disfigurement,[33 34 36] a sense that the relative had "suffered enough",[34 35] and unease with the PM itself.[34 35] Difficulties with the process of giving permission for a PM was cited by one study[35] as a reason for refusal.

Less attitudinal research has been carried out in the perinatal context and none with particular reference to perinatal trials. As trial participation can alter the grounds on which consent is sought, and could significantly alter the experiences of those involved, this is an important omission. There are, however, elements of the existing empirical literature in the perinatal and paediatric field that can shed some light on the complexity of professional and parental determinants of PM rates.

PROFESSIONAL VIEWS

The literature on professional views is useful in highlighting attitudes to the use of PMs in different clinical circumstances and for different groups of professionals. Four papers[15 37-39] report findings on attitudes to PMs.

VanMarter and colleagues[15] report a records based review supplemented by a questionnaire based study. In the review, they found an important association between rates of PM and presumed cause of death, with extremely premature babies being least likely, and those affected by a congenital anomaly being most likely, to undergo PM. They also found that giving permission for a PM was associated with repeated perinatal loss. Both findings seem to suggest that a parental wish for an explanation of events is important. It is, however, unclear from a review of records whether actual parental views, or professional perceptions of those views, are the most influential in this matter. In the questionnaire based element of the study, only professional views were sought. PMs were seen as more important by senior staff than by junior staff. In general, the sample saw the importance of the PM as being strongly related to the cause of death; whereas only 31% felt that they were very important when the cause of death was extreme prematurity, when the cause of death was congenital anomaly or an indeterminate cause, 94% and 91% respectively felt that they were very important.

The views of paediatricians and paediatric residents were surveyed by Stolman and colleagues.[37] Respondents indicated on a multiple choice questionnaire that, although most felt PMs provide valuable information, 20% felt that they are unnecessary if the disease was known before death. When consent is not sought for a PM, this related to concerns not to distress the family and respondents' belief that little information would be obtained. Seventeen percent of the sample indicated that they do not approach families who are upset.

In assessing the views of neonatologists, obstetricians, midwives, and neonatal nurses, Khong and colleagues[38] found that the most influential factor in the offer of a PM was perceptions of parental desire for a PM; when the diagnosis was clear and the parents did not desire a PM and planned no further pregnancies, there was least inclination to offer a PM. They argue that the determinant of PM rates in their sample was parental refusal, as the neonatalogists and obstetricians did not generally show reluctance to make an approach for consent.

Cottreau and colleagues[39] considered the views of pathologists and other clinicians. Although most clinicians saw PMs as useful, 50% felt that they should not be offered when the cause of death is known. Younger clinicians and younger pathologists saw PMs as less useful than their senior colleagues. There was greater discomfort in discussing PMs amongst paediatric staff compared with those dealing with adults.

PARENTAL VIEWS

Data are available on parental attitudes in a small number of studies[33 40 41] that provide some information on perceived advantages and disadvantages of PMs. A positive view of contributing to research is mentioned in two studies.

McPhee and colleagues[33] included parents in a general sample of bereaved relatives who had or had not permitted a PM. Although most likely to show concern over disfigurement, bereaved parents were singled out as the group especially likely to see benefits of a PM (listed in order of importance as advancement of medical knowledge, knowing the cause of death, and reassurance that all appropriate care was given). As 45% of those who did not permit a PM stated that they had not been approached, the authors argue, in contrast with the study by Khong and colleagues,[38] that reluctance of clinicians to offer PMs is likely to be more important than reluctance of relatives to sanction procedures.

Rankin and colleagues[40] found from a postal questionnaire of parents using a bereavement service that 81% of responding parents had taken up the offer of a PM. This is a high acceptance rate and may be due to the source of the sample, and the fact that the study included women who had miscarried or had terminated a pregnancy because of an abnormality. Although most of those accepting a PM did so for their own benefit—for example, wanted more information, wanted closure—24% wanted to contribute to research. Most of the refusers felt that their baby had "suffered enough", and that a PM would not help them.

McHaffie and colleagues[41] found that 38% of their sample of bereaved parents refused permission for a PM, with concerns over disfigurement of the baby as "a major preoccupation". Such concerns were also identified in relatives in non-paediatric settings.[33 34 36] Crucial to decision making was whether or not there was any further information that the parents, rather than the medical team, felt they needed.

DISCUSSION

The available literature sheds some light on attitudes to PMs generally and to perinatal and paediatric PMs outside of a trial context. This can be used as a first step towards understanding some of the issues likely to affect the management of PMs within a trial context. It describes some of the pre-existing concerns about PMs, on which the complicating factor of the request for PM information for a randomised controlled trial is superimposed.

> "...it is not clear whether actual parental views or professional perceptions of parental views are most influential"

These papers give some insight into ways in which parental views may intersect with those of professionals. Although they appear to show that, in usual clinical practice, PM rates are driven by parental inclination or disinclination towards further information, it is not clear whether actual parental views or professional perceptions of parental views are most influential.

The professional literature does suggest quite clearly that perinatal PMs appear to be valued only in certain circumstances. There is a strong theme that they are justified only if they have something important to offer parents—that is, if there is a query over the cause of death or if further information might be made available. If the likely cause of death appears to be clear, as in many cases of prematurity, then PMs are seen as inappropriate. As doctors decide whether or not to approach parents, there is clearly a process by which certain parents can be screened out. It is therefore likely that the subject of a PM is often not raised with parents of premature babies, or those who are thought to have no need for further information. It may be that those who are highly stressed, or who are thought to have suffered greatly, are also subject to a similar screening process. This is in spite of the fact that various studies have shown that PMs can provide unexpected findings that do not support the initially stated cause of death,[7 11 42] leading the Royal College of Pathologists to recommend that "relatives must be informed of the probability that a certified cause of death is wrong".[43]

Given this apparently dominant view that PMs are only warranted in certain circumstances, it is likely that requesting a PM in a trials context will further complicate the situation. If a PM is thought to have nothing to offer parents, the request to carry out a PM for a pathology study for a clinical trial would be seen as being only for the benefit of the wider community. Rather than having family welfare at the heart of the request, essentially newly bereaved parents could be asked to consent for altruistic reasons. With professional concerns to offer PMs only where there appears to be strong grounds, this may be seen as an inappropriate request. Although some parents have a strong desire not to have a PM, the literature does suggests that some parents may wish to make a contribution to research. It is, however, inadequate to assess whether parental reactions to these particular circumstances are similar to or different from their professional counterparts in this setting.

In addition to assessing attitudes to trial related PMs, it is important to determine what actually happens when parents are approached for consent, and what are the consequences, if any, of the approach. The offer of a PM, and the request that samples should be used for specific research purposes, raise particular issues for both professionals and parents. The combination of the dynamics between parental and professional views, and a fraught political setting, produce a complicated and multilayered encounter. As yet there are no descriptive data to afford a greater understanding of this situation, and no detailed information on reactions of the various parties. As the experiences of the offer and the decision making process could be very different from the usual clinical situation for all parties involved, the current literature is inadequate to aid understanding of experiences of perinatal pathology in a research context.

It is clear that further research is needed to explore this specialised area of consent and its consequences for those involved. A first step is taken in two linked papers, which report a qualitative study of the views of neonatologists and pathologists involved in two neonatal randomised controlled trials[44] and interview data from a small number of bereaved parents of babies enrolled in both trials.[45]

ACKNOWLEDGEMENTS

The Nuffield Foundation funded this study. JG worked on this study at the National Perinatal Epidemiology Unit where she was funded by the Department of Health. CS was accommodated by CFR and assisted by Sally Roberts.. Project coordination was facilitated by senior staff at the centres involved. Nina Hallowell, John Allison, David Field (and other members of the project's advisory group) commented on drafts of the paper.

Authors' affiliations

C Snowdon, D R Elbourne, J Garcia, Medical Statistics Unit, London School of Hygiene and Tropical Medicine, University of London, Keppel Street, London WC1E 7HT, UK
C Snowdon, Centre for Family Research, University of Cambridge, Free School Lane, Cambridge CB2 3RF, UK

REFERENCES

1 Joint Working Party of representatives from the Royal College of Pathologists, Royal College of Physicians of London and the Royal College of Surgeons. *Report of the Joint Working Party on the Autopsy and Audit.* London: Royal College of Pathologists, 1991.
2 Sanner MA. In perspective of the declining autopsy rate. Attitudes of the public. *Arch Pathol Lab Med* 1994;118.878–83.
3 Wlodaver CG. Why have autopsies grown so unpopular and what can we do about it? The clinical-pathological conference. *J Okla State Med Assoc* 1994,87:351.
4 McPhee SJ. Maximizing the benefits of autopsy, both for clinicians and families. What needs to be done? *Arch Pathol Lab Med* 1996 Aug,120·743–8.
5 Chariot P, Witt K, Pautot V, *et al.* Declining autopsy rate in a French hospital: physician's attitudes to the autopsy and use of autopsy material in research publications. *Arch Pathol Lab Med* 2000;124:739–45.
6 Loughrey MB, McCluggage WG, Toner PG. The declining autopsy rate and clinician's attitudes. *Ulster Med J* 2000;69.83–9.
7 Brodlie M, Laing IA, Keeling JW, *et al.* Ten years of neonatal autopsies in tertiary referral centre: retrospective study. *BMJ* 2002;324.761–3.
8 Joint Working Party of the Royal College of Obstetricians and Gynaecologists and the Royal College of Pathologists. *Report on fetal and perinatal pathology.* London: RCOG, 1988.
9 Kumar P, Angst DB, Taxy J, *et al.* Neonatal autopsies: a 10-year experience. *Arch Pediatr Adolesc Med* 2000;154:38–42.
10 Okoh FA. The autopsy: experience of a regional neonatal intensive care unit. *Paediatr Perinat Epidemiol* 2002, 16;4:350–4.
11 Cartlidge PHT, Dawson AT, Stewart JH, *et al.* Value and quality of perinatal and infant postmortem examinations: cohort analysis of 400 consecutive deaths. *BMJ* 1995;310 155–8.
12 Chiswick M. Perinatal and infant postmortem examination. *BMJ* 1995,310.141–2.
12a Furness P. Consent to using human tissue. Implied consent should suffice [editorial]. *BMJ* 2003;327:759–60.
13 Kmietowicz Z. Paediatric pathology service close to collapse. *BMJ* 2001;322.1270.
14 Maniscalo WM, Clarke TA. Factors influencing neonatal autopsy rate. *Am J Dis Child* 1982;136.781–4.
15 VanMarter LJ, Taylor F, Epstein MF. Parental and physician-related determinants of consent for neonatal autopsy. *Am J Dis Child* 1987;141:149–53.
16 Landers S, Kirby R, Harvey B, *et al.* Characteristics of infants who undergo neonatal autopsy. *J Perinatol* 1994;14.204–7.
17 Cox P, Scott R. Perinatal pathology in 2001. *Arch Dis Child* 2001;84:457–8.
18 Bristol Royal Infirmary Inquiry. *Learning from Bristol: the report of the public inquiry into children's heart surgery at the Bristol Royal Infirmary, 1984–1995.* London: HMSO, 2001(Cmnd 5207.).
19 Department of Health. *The removal and retention and use of human organs and tissue from post-mortem examinations: advice from the Chief Medical Officer.* London: DoH, 2001.

20 Hall C, Pook S. No one told us our babies were in a trial. *The Daily Telegraph* 1999 February 19:4.
21 Wilson E. They used our babies and never told us. *Daily Mail* 1999 February 19:1.
22 Hey E, Chalmers I. Investigating allegations of research misconduct: the vital need for due process. *BMJ* 2000;321:752.
23 NHS Executive West Midlands Regional Office. *Report of a review of the research framework in North Staffordshire Hospital NHS Trust* [Griffiths report]. Leeds: NHS Executive, 2000.
24 Jones R. Declining altruism in medicine [editorial]. *BMJ* 2002 March 16;324:624–625.
25 Sayers GM, Mair J. Getting consent for autopsies: who should ask what, and why? *BMJ* 2001;323:521.
26 Grunberg SM, Sherrod A, Muellenbach R, *et al.* Analysis of physician attitudes concerning requests for autopsy. *Cancer Invest* 1994;12.463–8.
26a McDermott MB. Obtaining consent for autopsy. *BMJ* 2003;327:804–6.
27 Birdi KS, Bunce DJ, Start RD, *et al.* Clinicians beliefs underlying autopsy requests. *Postgrad Med J* 1996;72:224–8.
28 Midelfart J, Aase S. The value of autopsy from a clinical point of view. A survey of 250 general practitioners and hospital clinicians in the county of Sor-Trondelag, Norway. *APMIS* 1998;106:693–8.
29 Start RD, Hector-Taylor MJ, Cotton DW, *et al.* Factors which influence necropsy requests: a psychological approach. *J Clin Pathol* 1992;45:254–7.
30 Hinchcliffe SA, Godfrey HW, Hind CR. Attitudes of junior medical staff to requesting permission for autopsy. *Postgrad Med J* 1995,71:60.
31 Lund JN, Tierney GM. Hospital autopsy: standardised questionnaire survey to determine junior doctor's perceptions. *BMJ* 2001;323:21–2.
32 Dziobon MD, Roberts SD, Benbow EW. Attitudes of nursing staff to the autopsy. *J Adv Nurs* 2000;32.969–74.
33 McPhee SJ, Bottles K, Lo B, *et al.* To redeem them from death. Reactions of family members to autopsy. *Am J Med* 1986;80:664–71.
34 Soloman SA, Adams KH. Attitudes of relatives to autopsies of elderly patients. *Age Ageing* 1993;22.205–8.
35 Start RD, Sherwood SJ, Kent G, *et al.* Audit study of next of kin's satisfaction with clinical necropsy service. *BMJ* 1996;312:1516.
36 Oppewal F, Meyboom-De-Jong B. Family members' experiences of autopsy. *Family Pract* 2001;18.304–8.
37 Stolman CJ, Castello F, Yorio M, *et al.* Attitudes of pediatricians and pediatric residents toward obtaining permission for autopsy. *Arch Pediatr Adolesc Med* 1994;148:843–7.
38 Khong TY, Turnbull D, Staples A. Provider attitudes about gaining consent for perinatal autopsy. *Obstet Gynecol* 2001;97:994–8.
39 Cottreau C, McIntyre L, Favara BE. Professional attitudes towards the autopsy. A survey of clinicians and pathologists. *Am J Clin Pathol* 1989;92.673–6.
40 Rankin J, Wright C, Lind T. Cross sectional survey of parents' experiences and views of the postmortem examination. *BMJ* 6 April 2002;324 816–18.
41 McHaffie HE, Fowlie PW, *et al.* Consent to autopsy for neonates. *Arch Dis Child Fetal Neonatal Ed* 2001;85.F4–7.
42 Porter HJ, Keeling JW. Value of perinatal necropsy examination. *J Clin Pathol* 1987;40.180–4.
43 The Royal College of Pathologists. *Human bodies, human choices.* Response from The Royal College of Pathologists. November 2002. www.rcpath.org.
44 Snowdon C, Elbourne DR, Garcia J. Perinatal pathology in the context of a clinical trial: attitudes of neonatologists and pathologists. *Arch Dis Child Fetal Neonatal Ed* 2004,89.F204–7.
45 Snowdon C, Elbourne DR, Garcia J. Perinatal pathology in the context of a clinical trial: attitudes of bereaved parents. *Arch Dis Child Fetal Neonatal Ed* 2004,89.F208–11.

ORIGINAL ARTICLE

Perinatal pathology in the context of a clinical trial: attitudes of neonatologists and pathologists

C Snowdon, D R Elbourne, J Garcia

Arch Dis Child Fetal Neonatal Ed 2004;89:F204–F207. doi: 10.1136/adc.2003.012732

Objective: To describe the attitudes of neonatologists to trial related perinatal postmortem examinations (PMs), in the light of declining perinatal PM rates and poor levels of participation in pathology studies.
Methods: A qualitative study was carried out, using semistructured interviews. Twenty six neonatologists from five UK neonatal units were interviewed; five UK perinatal pathologists also contributed to the study. The professionals involved were all linked to one or both of two neonatal trials.
Results: Pathologists expressed concern over the difficulties experienced in UK perinatal pathology and the impact on research of inadequate levels of samples. The interviews with neonatologists reveal discomfort over approaching bereaved parents for PMs, and a widespread concern that parents should not be further distressed or feel under pressure to consent. Although there was support for neonatal trials, the study highlights a view that PMs may be unnecessary if the cause of death seems apparent or when a baby was born prematurely, and a devaluation of PMs among some younger staff. Poor rates of participation in pathology studies may be accounted for by a notable sense of disconnection between trial interventions and pathology studies.
Conclusions: Neonatologists were concerned to protect vulnerable parents and varied in whether they saw this as compatible with inclusion in trial related pathology studies. Dedicated research is needed to document and gain an understanding of the consent process and should examine the usefulness and impact of consent forms. It should assess whether professionals might benefit from training, to help parents to come to their decisions.

See end of article for authors' affiliations

Correspondence to: C Snowdon, Centre for Family Research, University of Cambridge, Free School Lane, Cambridge CB2 3RF, UK; cms1000@cam.ac.uk

Accepted 2 October 2003

In the first of three linked papers[1] we argued that potentially complex reasons for declining perinatal postmortem (PM) rates warrant further research. This paper reports a qualitative study of views of 26 neonatologists and five pathologists involved in two neonatal randomised controlled trials (RCTs). A further paper[2] reports interview data from a small number of bereaved parents associated with these trials.

METHODS

Neonatologists

The neonatologists were associated with one or both of two RCTs. The INNOVO trial (www.innovo-trial.org.uk) compared giving babies of any gestation either inhaled nitric oxide using a ventilator or standard ventilator care. The CANDA trial[3] compared two surfactants for preterm babies. The INNOVO trial had a PM protocol and specific organ studies (heart, lungs, and brain). Although the CANDA trial had no specific PM study, if PMs were carried out, information from lung tissue was used to supplement trial findings.

Thirty one neonatologists involved with recruitment to these trials from five centres were approached to participate in the qualitative study during 1999–2001. Centre A recruited neonates to the INNOVO trial only, B–D to both trials, and E to the CANDA trial only. One neonatologist declined to be interviewed. The semistructured interviews covered a wide range of issues raised by RCTS. They were all conducted by CS, tape recorded, fully transcribed, and analysed with the assistance of a computer based qualitative analysis package, Atlas-ti.[4] CS was primarily responsible for the analysis, but DE and JG also read all transcripts and agreed the analysis.

The subject of PMs was first raised in the fourth interview, and then incorporated into the interview schedule. Data are therefore presented from 26 interviews. Eleven interviewees were consultants. Twenty three were male. Ages ranged from 30 to 54, mean 37 years. Eight were linked to the INNOVO trial only, eight to the CANDA trial only, and 10 to both trials.

Pathologists

The pathologists' views were collected after analysis of the neonatologists' views. Six pathologists associated with the INNOVO trial pathology study and one associated with the CANDA trial were invited to respond to the issues raised. Five responded in writing or by telephone. Their anonymised comments contextualise the neonatologists' views.

Ethics

Relevant multicentre and local research ethics committee approvals were given for the two trials and for this qualitative study.

RESULTS

Pathologists' views

Pathologists expressed much concern over the difficulties experienced in UK perinatal pathology. In addition to a long standing problem of few specialist training posts, they felt their profession was under a great deal of strain, "a very sad state indeed".

> [Pathologists] have taken a huge beating and are giving up. ...Vital research cannot be done, and it has a huge knock on effect. I used to see 150 baby [organs] per year. Last year I had 13. If I have this level of material I cannot make diagnoses, cannot help parents to understand why

Abbreviations: PM, postmortem examination; RCT, randomised controlled trial

their baby died and will not retain my own diagnostic skills for lack of experience.

Another pathologist had received only one sample for the INNOVO trial in the previous year. A third described sharply declining rates since involvement in an earlier neonatal RCT, and felt this is "to the detriment of clinical care and to the extreme detriment of the parents who fail to get useful information to help them come to terms with their loss."

Pathologists were asked to reflect on the value of pathology studies for neonatal RCTs. Their views were clear, arguing that there is an inherent danger in poorly evaluating potential ill effects of experimental treatments.

[Postmortems] should be almost mandatory in any situation where any kind of therapy is being tested in a clinical trial. ...[We should not] treat these children as some kind of experimental laboratory animal. Far from it. It is the case however that each individual child who receives treatment and each individual child who unfortunately succumbs to their pathology while under treatment represents an irreplaceable source for the assessment of innovative therapies. We have a responsibility to ensure not only efficacy of treatment in a positive sense but also absence of deleterious effects. It would be a great sadness if these treatments were to escape into the general usage and subsequently be identified as being deleterious in the years to come.

As pathologists are not involved in the consent process, they depend on neonatologists as mediators, with the potential to affect the situation positively or negatively. When consent rates were low, they felt this related to professional discomfort and lack of knowledge about the role and value of PMs.

[They] must be seen as a continuation of the trial not as a further intrusion in the harrowing process that parents suffer leading up to the death of their children. It is critical that the consent process is handled by people who are committed to all aspects of the trial protocol and do not have an agenda which excludes the PM from that process. There is rather too much of a view that the child has "suffered enough" which intrudes in the process of asking for a PM examination. It is entirely appropriate that parents should be encouraged in the belief that they are making a significant contribution to the greater good. Many parents find some satisfaction in the hope that their loss can prevent similar things happening to other children.

Neonatologists' views

Responsibility to the trial and to the parents

Neonatologists were asked whether a baby's enrolment in a trial affected their approach to parents. Responses were linked to the responsibility they felt to the trial, to parents, and how they viewed the impact of the approach.

They articulated varying degrees of responsibility to contribute to RCT pathology studies, which appeared to be determined by their knowledge of trials and their allegiance to parents. They varied in familiarity with PM processes generally and specifically for the INNOVO and CANDA trials. Most consultants were knowledgeable about requirements and described alternatives such as limited PMs if parents are uncomfortable with certain procedures. [9] Neonatologists' views are divided into three broad groups: those suggesting a sense of responsibility that was (*a*) equal, (*b*) divided, or (*c*) prioritised.

A sense of equal responsibility

Neonatologists with a sense of equal responsibility viewed their RCT contributions as important, and felt it is possible to combine these with full consideration of the needs of families. Within this group, some described a moral responsibility to contribute to trials, with a consultant arguing that he feels "mandated" to do so. Another feels "even more of an imperative to try to get PM tissue within the trial context". In his view, not carrying out a PM would be an "opportunity lost". These neonatologists felt they could combine what they saw as their duties to individuals with duties to the wider community.

A sense of divided responsibility

Some neonatologists described with some anxiety, their feelings of responsibility to research, as well as to families in their care. They exhibited some doubt over whether the two could be served by inclusion in PM studies. For some, there was great tension between the ideal of contributing to research while also providing care.

With the knowledge that trials are used to improve care, one neonatologist described a moral pressure to gain consent for a PM. He foresaw a potential conflict of interests between individuals and the wider community.

There would be some pressure on the person requesting the autopsy, that they do so for the benefit of the trial and prospective future babies who might be enrolled in that trial. ... [If] it was causing problems and causing deaths then it clearly would be to everyone's advantage to find out that early. You have to balance that against the parents' wishes to not have an autopsy.

The sense of pressure was a concern for a few. Intellectually they felt that PMs are important, and that inclusion in a trial means that there is a responsibility to explore the possible impact of interventions. Practically and emotionally, however, the shift from providing care in a clinical context to a research context could cause great problems.

[Normally] if you say to the parents, "Can we do a postmortem?" and they say no, you say, "Well, OK." Whereas ... you're under a little bit more pressure 'cos you're in a study to actually then push them a little bit harder and say, "Look, we really do need this, this will help other babies." They say, "Look, I've already helped other babies [by being] in the study to start with, now you're asking me to ... chop my baby up, I just want his pain to end." So I do feel ... they've got a point there.

A prioritised sense of responsibility

Some expressed the view that parental needs should be prioritised, while responsibility to trials was attributed varying degrees of importance. Neonatologists could see trials as important but secondary to parental needs. A consultant commented that consent for a PM for neonatal RCT purposes "wouldn't be top of my priorities." Another consultant who aims to offer trial related PMs was adamant that there be no further discussion once parents indicate their choice: "if they say no, they say no, end of story. Looking after the family comes way before the trial."

Some neonatologists described PMs only in terms of the patient for whom they had clinical responsibilities and were unaware of their value for neonatal RCTs. They seemed unaware of a role other than to ascertain cause of death and argued that trial enrolment made no difference to consent. Although less senior neonatologists were often responsible for initial trial recruitment, some were unfamiliar with pathology elements of the trial. This may not be surprising given the various career stages of interviewees, and supports similar findings in the literature.[6] Few of these had considered that trial participation may change the importance of a PM, the grounds on which it is required, or the information that may be requested by parents. It was striking that, in the interviews (which explored various ways in which practice and parental experiences were shaped by inclusion in neonatal RCTs), the PM and the RCT were often considered to be unconnected. This was particularly clear when four neonatologists who had recruited to the INNOVO trial, including a consultant, were unaware of the pathology study. Some neonatologists placed little value on PMs themselves, arguing that they were unnecessary as it is often clear why a baby has died (see below).

PMs solely as trial requirements

If there is no query over cause of death, but a baby could be included in a neonatal RCT pathology study, essentially newly bereaved parents could be asked to permit a PM for purely altruistic reasons. Some neonatologists saw it as appropriate to request such a PM, albeit carefully, some saw the value but viewed it as inappropriate, and some saw it as unnecessary, particularly for preterm babies where much is known about causes of death. One consultant felt that few doctors would be enthusiastic about approaching parents in such circumstances. This is borne out by low preterm PM rates in the INNOVO trial (26% preterm *v* 67% term) and the comments of a less senior neonatologist.

> [Postmortems] are of very limited value. You usually know why a baby has died. So ... why cut them up. If you don't know why a baby has died then it's perfectly valid ... but if you've got a prem baby ... I think that the parents might well think that you're pushing it because of the trial.

When doctors were uncomfortable and when they felt a PM had little to offer parents, there were clear difficulties. A specialist registrar who was well informed about trial requirements felt it was far more discomforting to ask for a PM for a trial than purely on clinical grounds.

> [In] a conventional postmortem you restrict the area to somewhere you're unsure [eg] the cause of death ... [The] problem with ... INNOVO [is] that even in babies who died of something completely different ... or we know the cause of death, their brain and a chunk of their lungs and a chunk of their heart are going to go to different areas of the country, and the baby's going to be buried without those organs ... There are lots of issues around that I do feel a bit uncomfortable with.

Concerns over application of pressure

Regardless of where doctors saw their responsibilities, they were concerned that bereaved parents should not be pressured to consent to a potentially disturbing procedure. There was also concern that requesting a PM for the benefit of others may be construed as "emotional blackmail" or "a bit callous". There was also concern over the possible inference that a baby may have been harmed as a result of the parental decision to join a trial.

> [It's] almost unfair to suggest to them that there's more of a reason to do a postmortem on their baby than another baby who wasn't part of the trial. [It] ... might suggest that there might be something that the trial did that we need to find out.

Neonatologists commonly said that they back down as soon as they sense parents' discomfort. One neonatologist said that when he realises that parents are going to decline, he does not feel that it is "appropriate in any way to push beyond that." Another felt that dropping the subject very quickly eased his own situation.

> I never felt under pressure to get parents to consent to a postmortem, in fact quite the opposite. If the family didn't want [one] we really left it very rapidly.

Management of consent

If parents are approached, local practice and legal requirements have to be carefully balanced with parental needs. Current Department of Health guidelines state that consent forms should involve decisions about which body parts may be studied (a full or limited PM), how body parts should be disposed of, and whether samples may be used and retained for research purposes.[7] At the time of the trials, information followed the then standard guidelines and was much less explicit, but by the time of the present study, most centres had drawn up their own very detailed forms. There was some variety in how these forms were viewed and used. They could be seen as a means of bringing parents to an understanding of their options, but could also give professionals a sense of being "covered by the consent form" precisely because they refer to research. They could be used after an initial discussion, with parents being given the forms to read on their own when they felt able to do so. This could be due to the time it takes to go over long, legalistic documents, or to allow parents some privacy. They could also be used to frame discussion of the details of a PM, including the collection of research samples.

Confronting parents with unsettling information and asking them to make decisions, such as whether or not to permit removal and retention of a brain, can be stressful for everyone. Whereas some saw detailed information giving as appropriate, others felt it marked a shift to a more defensive professional position and placed too great a burden on parents. One neonatalogist described it as "absolutely ridiculous" and "not fair on the parents"; another asked "how brutal do you really want to be with bereaved parents?" One senior consultant commented:

> We have a consent form that actually talks about removal of the brain ... [There's] no question at all, it becomes uncomfortable. You are trying to support parents at a terrible time ... [but you are also asking] them to do something very horrible to their [baby]... I can see myself refusing post-mortem too.

It is important to note that this consultant had not, however, lost faith in the consent process, which he valued highly.

On the one hand it's much more uncomfortable for them having to think through that at a time when they're very distressed but on the other hand they're more informed and they've made a clear and informed choice. So it has to be better, I'm in absolutely no doubt at all about that.

DISCUSSION

The doctors interviewed for this study are working in a difficult climate. There is a worldwide move towards greater openness in research and clinical practice, with a high value placed on the quality of informed consent. Most centres now use detailed forms for consent for both RCTs and RCT related PMs. These two consent processes were, however, often viewed by the doctors in this study as discrete events, not as part of a linear process.

Although some doctors embraced the direction that consent for PMs has taken, openness in discussion of PMs led some to feel that they are engaging in something that is potentially rather "brutal". The need to discuss research further complicates an already sensitive area, and they clearly felt that all parties require some protection in precarious emotional and political circumstances. Most found PM discussions problematic, and all tread a careful path in dealing with bereaved parents. As professionals, they expose themselves to a degree of risk by entering an arena that has caused such a political furore in the United Kingdom, and this can only add to their misgivings.

One response to this situation is to approach parents with a great deal of caution. This can involve immediate discontinuation of discussions when parents are uncomfortable.

Another response is to make selective approaches to those who seem to be coping or when a PM is already indicated for other reasons. The request for samples when a PM is for clinical purposes allows a doctor to put the request in less discomforting terms. Crucially this offers realignment with the role of carer rather than researcher. It may also, however, make the role of samples for trial purposes less clear for some.

A third response which may become increasingly common is to make no approach and to opt out of neonatal RCT pathology studies altogether. A head of department in this study stated that, given the UK political climate, he would be reluctant to ask any parents for a neonatal RCT PM and doubted whether any colleagues would do so.

This undoubtedly offers individual parents protection. However, when few samples are sent for pathology studies, not only are there fewer data on which a trial data monitoring committee can base its recommendations about continuation or otherwise of the trial, but also the scientific rigour of the pathology study is undermined. This is especially the case if samples are sent from a highly selected group. The effects of low numbers of samples are already being felt in the trials world. In anticipation of poor rates, there is likely to be a shift towards simply not including pathology studies in RCTs.

Conclusions

There are two separate impulses at work here: to tell and not to tell, both based on the desire to protect parents and to ease a professional situation. This reflects an uneasy climate in which the tensions between the expectations of the trials community and the everyday practicalities of caring for families have not always been fully worked through. If professionals are uncomfortable, it is likely that parents will also be. It is therefore important that those involved in neonatal RCTs find a clearer way through the situation which is feasible for clinicians and not to the detriment of vulnerable parents.

To date this is the only study reporting on attitudes to RCT related PMs. There are, however, limitations to this study. The fact that views on the subject of PMs were collected as an adjunct to the larger topic of the professional experiences of recruitment to RCTs means that the study was not set up primarily to explore these issues. It is most important that the concerns doctors and parents should receive further attention, through discussion by the wider research community and through dedicated research. Research should document the consent process and clarify the effect of the difficulties described here. It should assess the steps taken to protect these parties from problems over consent, and most specifically should examine the usefulness and impact of particular consent forms. It should assess whether professionals might benefit from training in the skills that go along with helping parents to come to their decisions. Quite clearly, all parties require a degree of support. Research is needed to decide what that support ought to be.

ACKNOWLEDGEMENTS

The Nuffield Foundation funded this study. JG worked on this study at the National Perinatal Epidemiology Unit where she was funded by the Department of Health. CS was accommodated by CFR and assisted by Sally Roberts. Nina Hallowell, John Allison, and David Field (and other members of the Project's advisory group) commented on earlier drafts of the paper. We thank the neonatologists and pathologists who gave generously of their time.

Authors' affiliations

C Snowdon, D R Elbourne, J Garcia, Medical Statistics Unit, London School of Hygiene and Tropical Medicine, University of London, Keppel Street, London WC1E 7HT, UK
C Snowdon, Centre for Family Research, University of Cambridge, Free School Lane, Cambridge CB2 3RF, UK

REFERENCES

1 Snowdon C, Elbourne DR, Garcia J. Perinatal pathology in the context of a clinical trial: a review of the literature. *Arch Dis Child Fetal Neonatal Ed* 2004;89.F200–3.
2 Snowdon C, Elbourne DR, Garcia J. Perinatal pathology in the context of a clinical trial: attitudes of bereaved parents. *Arch Dis Child Fetal Neonatal Ed* 2004,89.F208–11.
3 Ainsworth SB, Beresford MW, Milligan DWA, *et al*. Pumactant and poractant alfa for treatment of respiratory distress syndrome in neonates born at 25–29 weeks' gestation: a randomised trial. *Lancet* 2000;355:1387–92.
4 Muhr T. A prototype for the support of text interpretation. In: Tesch R, ed. *Qualitative sociology*. New York: Human Science Press, 1991.
5 Raffles A, Ropel C. Non-invasive investigations are also helpful if permission for a necropsy is refused. *BMJ* 1995 April 1;310.870.
6 VanMarter LJ, Taylor F, Epstein MF. Parental and physician-related determinants of consent for neonatal autopsy. *Am J Dis Child* 1987;141:149–53.
7 Department of Health Clinical Ethics and Human Tissue Branch. *Families and post mortems: a code of practice*. London: DoH, 2003.

Downloaded from fn.bmjjournals.com on 24 May 2005

ORIGINAL ARTICLE

Perinatal pathology in the context of a clinical trial: attitudes of bereaved parents

C Snowdon, D R Elbourne, J Garcia

Arch Dis Child Fetal Neonatal Ed 2004;89:F208–F211. doi: 10.1136/adc.2003.041392

Background: Interviews with neonatologists in a related study had revealed a degree of discomfort with approaching bereaved parents for postmortem examinations (PMs) and a widespread concern that parents should not be further distressed or feel under pressure to consent.
Objective: To report the attitudes of bereaved parents to trial related perinatal PMs, in the light of declining perinatal PM rates and poor levels of participation in pathology studies.
Methods: A qualitative study was carried out, using semistructured interviews. The study involved 11 interviews with 18 bereaved parents from five UK neonatal units. The parents had consented to the enrolment of their baby in one of two neonatal trials.
Results: The data provide support for the careful approach described by neonatologists in a related study, but also suggest that it may be possible to approach more parents without undermining their wellbeing. The interviews show the variety of reactions to PMs that one would expect, from parents who were clear that they did not want a PM to others who felt that they needed the information from the examination. Between these extremes were parents who were initially discomforted by the idea but who then made the decision to go ahead. Parents who elected to have a PM did so for their own needs, or to contribute to a trial, or for both reasons. The fact that the subject was raised was generally not seen as inappropriate, and none stated that they felt that they were actually pressured into making their decision. The data also suggest that for some parents the degree of caution and selectivity exercised by the neonatologists may not be entirely appropriate. In two cases, consent for the PM was driven by a sense of making an altruistic contribution to research, and, in another two, altruism was expressed in the context of their own desire for information from a PM.
Conclusions: It is important to determine whether trial related pathology studies are considered by professionals and lay people to be worth while and feasible. If there is support for such studies, the challenge is to develop the means to approach more parents in the most sensitive way.

See end of article for authors' affiliations

Correspondence to: C Snowdon, Centre for Family Research, University of Cambridge, Free School Lane, Cambridge CB2 3RF, UK; cms1000@cam.ac.uk

Accepted 5 October 2003

In a review of the literature[1] and through a qualitative study of the views of pathologists and neonatologists,[2] we have examined issues raised by neonatal postmortem examinations (PMs) conducted for research purposes. We conclude that little is known about the impact on parents of requesting a PM on an infant who has been enrolled in a clinical trial. Although there is some evidence that contributing to research is important to some parents[3 4] and to other bereaved relatives,[4 5] the effect of the request to make such a contribution has not previously been explored.

Our research with professionals showed that some neonatologists were uncomfortable about approaching bereaved parents for PMs because of their concern that parents should not be further distressed or feel under pressure to consent. Others have shown that families can experience distress if communication is poor[5] or may be less likely to agree to a PM if an approach is perceived as insensitive.[6] Two important obstacles that also emerged—that is, devaluation of PMs among younger staff, and the feeling that PMs may be unnecessary in certain cases (known cause of death, prematurity)—have also been highlighted in the wider literature.[4 6 7] A most important factor that has not previously been described was a sense of disconnection between trial interventions and pathology studies.

We wished to learn whether the concerns expressed by the neonatologists are reflected in the parental accounts. We used the opportunities afforded by a related study to explore parents' views.

METHODS

The research was carried out with bereaved parents of babies who were enrolled in one of two neonatal trials at one of five centres. The trials were the INNOVO trial (which compared giving inhaled nitric oxide to babies with severe respiratory failure with the usual ventilatory care (www.innovo-trial.org.uk)) and the CANDA trial (which compared two surfactants for preterm babies).[8] The professionals interviewed in the linked study[2] were associated with the same two trials. Approval was obtained from all relevant ethics committees.

Almost half of the babies recruited to the INNOVO trial died, and there was a low PM rate. In the trial, 80/168 babies died and 27 PMs were carried out (34%). More PMs were carried out for term than for preterm babies (67% *v* 26%). In the INNOVO centres linked to this qualitative study, 48/84 babies died and 16 (33%) PMs were carried out. For the CANDA trial nearly a quarter of the babies died (45/199) and 17 underwent a PM (45%). In the CANDA centres in the qualitative study, 38/159 died and 16 underwent a PM (42%).

Contact with the parents was negotiated by the local hospital consultant, who would approach them either at a bereavement visit or by letter or telephone to ask if the researcher could write to them about the qualitative study. Access to bereaved parents in fact proved to be very difficult. Permission to approach parents was withheld at one of the largest study centres, and many cases in which consultants had concerns over parental wellbeing were excluded.

Twenty one letters were sent to parents (16 INNOVO and 5 CANDA). No reminder letters were sent, at the request of the research ethics committees. Eleven interviews were carried

Downloaded from fn.bmjjournals.com on 24 May 2005

out, by CS (8), MM (2), and DE (1). The interviews took place in the parental home and were tape recorded and fully transcribed, with the exception of one, which was corrupted. The loss of data from this one tape left 10 interviews (seven INNOVO and three CANDA) with 16 parents of 12 babies who had died. The transcripts were analysed by identifying and grouping emerging themes until no new issues were raised. This process was assisted by a textual analysis computer package, Atlas-ti.[9] One of us, CS, was primarily responsible for the analysis, but DE and JG also read all the transcripts and agreed the analysis.

VIEWS OF THE BEREAVED PARENTS

In four cases, the parents had decided that they did not want any further examinations for their babies. In five cases, the parents agreed to a PM. The information is not available for two cases.

Themes that emerged from the interviews included the parents' reactions to the offer of a PM (in particular whether or not they felt pressured in the discussion), whether they articulated any sense of connection between the trial and a PM, and the value attached to the information derived.

Reaction to the offer of a PM

There were no particularly negative accounts from the parents of their discussions with neonatologists. There was only one case in which parents specifically stated that they refused because of the organ retention controversies.[1 2]

A mother of twins enrolled in the INNOVO trial described a feeling of pressure. She felt it was thought to be clear why her babies had died, but that there was some doubt about one particular aspect of their case. They were left to think the issue over, and their doctor telephoned them at home for their decision. The mother reported that he specifically said that he did not wish to pressure them, but she commented:

> I must admit I didn't feel comfortable saying no to him. I remember thinking at the time that—I don't know if it was his manner—but I just felt like a postmortem would be more for him than it would be for us, and I just wasn't prepared to do it.

She found the idea of a PM very difficult, even though there was the possibility that it would provide them with useful information. She told her partner "I just can't", on the grounds that their babies were "like dolls".

The desire not to pressurise can result in very limited discussions, leaving parents feeling that PMs are irrelevant in their case. One father stated that during their discussion of the possibility of a PM, there was no mention of previous participation in the INNOVO trial, and that in fact they were encouraged to view a PM as unnecessary by their consultant.

> [A postmortem] was brought up as an option and I think [the doctor], without wishing to put words in our mouths said, you know as far as they could see [he] was born premature and there was nothing really wrong with him ... Maybe he was hinting that they wouldn't actually find anything out that they didn't really already know and really that [was] coupled with the fact [that] he'd had more than enough done to him.

These parents felt that they were being spared the stress of deciding about a PM. They said that they appreciated being guided by a caring neonatologist who had eased the situation for them. The mother commented that they "didn't feel pressured at all either way."

Connection to the trial

Four of the couples had made a connection between the trial and a PM. One couple sought out a PM, raising the subject with their doctor. This was part of a strong desire to understand their baby's death and to make sense of events. They wanted to know whether inclusion in the trial could have contributed to the death, and felt that the results were reassuring. The generation of valuable information from a PM was an important coping strategy for both parents.

> It's getting the positive from the negative because a baby's death becomes a very negative thing. ...When it's a prem baby, they don't make a noise, they don't open their eyes, so you never see the colour of their eyes. The only thing you've got is that touch ... The only events that you remember are painful events so that's why ... you have to start getting positives. And the positive for us was that, number one we may have got an answer, but number two somebody else may gain from that.

Another couple whose baby was enrolled in the INNOVO trial also articulated altruistic feelings, specifically in terms of the trial. The mother had initially felt very uncomfortable with a PM, whereas her partner was prepared to go ahead. She changed her mind as she came to feel that there would be certain benefits from the information, in clarifying the cause of death for themselves, and as a contribution for others.

> [We] agreed ... because even though it [nitric oxide] didn't work for us, if they could get anything from it that would help other people then it was worth it ...

The father explained how they came to view the PM.

> [We felt that] he's had this trial and they might as well get what information they can about it. You know at least he hadn't gone to waste then.

Parents of two babies appeared to have consented to a PM on purely altruistic grounds. One mother consented and said in the interview, "if it'll help somebody else later on then I'm fine." Her partner, however, subsequently refused, and the PM did not take place. Another mother of a baby enrolled in the INNOVO trial specifically discussed the value of a PM for research purposes. Although her initial reaction was to refuse, after a further discussion with her baby's consultant in which she was told that the examination would be useful for research purposes, she agreed. She stated that she did not feel under pressure.

> [He] asked if they could do an autopsy and I said no, and then he says "well she's been on a trial and it would help". I says "well if it's going to help another baby ... yeah, you can do it". He says 'we're just going to take part of her lung away, just to see what it was" and I said "Okay then."

Thereafter her story involves the type of experiences which can, understandably, make neonatologists nervous of approaching parents. She had wanted to bring her baby home before the funeral but had a five day delay because of the PM. After three days she called her doctor, saying "I'm [doing] this as a favour to you, but I want her home". When the baby was returned to her she was distressed when she

Downloaded from fn.bmjjournals.com on 24 May 2005

examined her baby's body, as she had not expected to see an incision in the head.

> I'd dressed her [in a] little dress and a hat [but] they put her hat on back to front, the wrong way so I took [it] off and they'd gone into her head and I didn't know. And it was just horrible. ... I'm annoyed that they didn't say that they were going to go in. I didn't know you know and I did say to [the doctor] when I went back in, ... "when you say they're gonna have an autopsy, I think you should tell them that you're going to go into their head", I says "because that has stayed with me and that's a sight that will never ever leave me".

Clearly she was unprepared for such a disturbing sight, and for her there was a sense that something quite inexplicable had happened. She could see no reason why it would have been necessary to have carried out an examination of the brain. Whether or not she was told at the time that she gave her consent of the various elements of the PM cannot be determined. What is clear is that she did not feel that she had been told of this detail and was subsequently confronted with the reality of a PM in a shocking and brutal way. She was asked in the interview if it might have helped to have written information about what was going to happen, and she felt that it would. Despite this experience, she spoke very positively of the doctor involved, saying "I got on really well with him"

DISCUSSION

It has been argued that, in a context of stress, desperation, and vulnerability, parents of babies in neonatal care will give consent "to do almost anything to their baby",[10] and that consent in certain neonatal trial settings is "an elaborate ritual"[11] or "a sham".[12] There is also empirical evidence that neonatal trials may have higher rates of consent than trials in other settings: Campbell *et al*[13] found that, in a sample of trials, 96% of neonatal trials reported 100% consent rates, compared with 68% of general paediatric trials. Whereas few decline to participate in neonatal trials, the numbers agreeing to trial related PMs for neonates are, in contrast, very low.

The two consent encounters are in theory linked, taking place at different points in a linear process and involving the same parties. The circumstances are, however, clearly different and in practice have become rather disconnected. At consent for recruitment to a trial, the fact that the offer of enrolment is often in the context of trying to save the life or improve the condition of a very sick baby is likely to motivate professionals to offer enrolment and parents to consent. At the second point, the death of the baby is uppermost in the minds of all concerned, and there is nothing more that can be done to benefit that child. The sense of striving for a solution is replaced by the need to deal with the emotional sequelae of bereavement, and any further requests can be seen as inappropriate. In cases when parents are grief stricken or even angry, engagement with discussion of the benefits of PMs for others is highly unlikely. This broad division of circumstances can mean that, as shown by our study of the views of neonatologists,[4] doctors who are willing to recruit to trials can be reluctant to go on to recruit into trial related pathology studies, for fear of making seemingly inappropriate and insensitive requests.

The data from this small study of the views of bereaved parents provide support for this careful approach, but also suggest that it may be possible to approach more parents without undermining their wellbeing. The parents who were interviewed show the variety of reactions to PMs that one would expect, from those who were clear that they did not want a PM to others who felt that they needed the information from the examination. Between these extremes were parents who were initially discomforted by the idea but who then made the decision to go ahead. Parents who elected to have a PM did so for their own needs, or to contribute to a trial, or for both reasons. It is reassuring that the fact that the subject was raised was generally not seen as inappropriate, and none stated that they felt that they were actually pressured into making their decision.

The data also suggest that, for some parents, the degree of caution and selectivity exercised by the neonatologists may not be entirely appropriate. In two cases, consent for the PM was driven by a sense of making an altruistic contribution to research, and, in another two, altruism was expressed in the context of their own desire for information from a PM. Although these parents are not necessarily typical, their views may be shared, but in a more private way, by other parents who are not always given the option of a PM. If bereaved parents are not given information about the value of PM samples, even those from a limited PM,[14] they may be denied the chance to make their own decisions about contributing to research. This type of research may in fact be appreciated by some parents who have been deeply affected by neonatal loss.[15] From our interviews with many parents who have been involved in neonatal trials,[16–18] it seems that neonatal research is often highly valued. They can be keen to make some contribution and often express this when interviewed. Whether or not this can be said to extend to the larger group of bereaved parents, and would be applied to pathology studies, cannot as yet be answered. It would seem, however, that there is evidence in the literature[1 4 19] and in our small study, that some may support the idea of contributing to research through a PM. The specific context of a trial may make their contribution more concrete than an abstract notion that a PM may contribute to knowledge in some general way. We would suggest, although it is conjecture, that a positive sense that babies of the future may benefit from this decision may be important to such parents in the longer term. Undoubtedly, however, there are parents who would find the request very difficult. The difficulty for neonatologists is working out who will be receptive and who will be disturbed, a minefield they tread with understandable caution.

Conclusions

It is important that the trials community explores this issue further to determine whether or not trial related pathology studies are considered by professionals and by lay people to be worth while and feasible. If there is support for such studies, the challenge is to develop the means to approach more parents in the most sensitive way.

There are important limitations to this very small study. PMs for trial purposes were not the focus of the interviews. As the data are incidental they do not provide a full description of experiences of and reactions to the consent process. We would suggest that a larger study dedicated to researching the issues raised here is appropriate and timely. The practical and methodological problems associated with such a study should not be underestimated. Access to bereaved parents is difficult, as clinicians and ethics committees wish to protect the families under their jurisdiction. Access here was negotiated by consultants, and it is likely that this acts as a filter. Consultants were very protective and were less likely to allow those who had been particularly distressed to be approached about participation in research that would explore their distressing experiences. Inevitably, interviews do raise some difficulties for parents in drawing on a traumatic time, but we found the parents to be thoughtful and often keen to be heard. They constitute a

Downloaded from fn.bmjjournals.com on 24 May 2005

group with a considerable personal investment in developments in neonatal intensive care. Their opinions should be sought on the best ways to protect parents with similar experiences to their own.

ACKNOWLEDGEMENTS

We thank the parents who gave generously of their time. The Nuffield Foundation funded this study. JG worked on this study at the National Perinatal Epidemiology Unit where she was funded by the Department of Health. CS was accommodated by CFR and assisted by Sally Roberts. Project coordination was facilitated by senior staff at the centres involved. Marion MacAllister conducted two of the interviews, and Nina Hallowell, John Allison, and David Field (and other members of the project's advisory group) commented on drafts of the paper.

Authors' affiliations

C Snowdon, D R Elbourne, J Garcia, Medical Statistics Unit, London School of Hygiene and Tropical Medicine, University of London, Keppel Street, London WC1E 7HT, UK
C Snowdon, Centre for Family Research, University of Cambridge, Free School Lane, Cambridge CB2 3RF, UK

REFERENCES

1 Snowdon C, Elbourne DR, Garcia J. Perinatal pathology in the context of a clinical trial: a review of the literature. *Arch Dis Child Fetal Neonatal Ed* 2004;89:F200–3.
2 Snowdon C, Elbourne DR, Garcia J. Perinatal pathology in the context of a clinical trial: attitudes of neonatologists and pathologists. *Arch Dis Child Fetal Neonatal Ed* 2004;89:F204–7.
3 Rankin J, Wright C, Lind T. Cross sectional survey of parents' experience and views of the postmortem examination. *BMJ* 2002;324:816–18.
4 McPhee SJ, Bottles K, Lo B, *et al.* To redeem them from death. Reactions of family members to autopsy. *Am J Med* 1986;80:664–71.
5 Start RD, Sherwood SJ, Kent G, *et al.* Audit study of next of kin's satisfaction with clinical necropsy service. *BMJ* 1996;312:1516.
6 VanMarter LJ, Taylor F, Epstein MF. Parental and physician-related determinants of consent for neonatal autopsy. *Am J Dis Child* 1987;141:149–53.
7 Cottreau C, McIntyre L, Favara BE. Professional attitudes towards the autopsy. A survey of clinicians and pathologists. *Am J Clin Pathol* 1989;92:673–6.
8 Ainsworth SB, Beresford MW, Milligan DWA, *et al.* Pumactant and poractant alfa for treatment of respiratory distress syndrome in neonates born at 25–29 weeks' gestation: a randomised trial. *Lancet* 2000;355:1387–92.
9 Muhr T. A prototype for the support of text interpretation. In: Tesch R, ed. *Qualitative sociology*. New York: Human Science Press, 1991.
10 McIntosh N. Strengthen ethical committee's role [letter]. *BMJ* 1993;307:1496.
11 Mason S. Obtaining informed consent for neonatal randomised controlled trials: an "elaborate ritual"? *Arch Dis Child Fetal Neonatal Ed* 1997;76.F143–5.
12 Anon. Your baby is in a trial [editorial]. *Lancet* 1995;345.805–6.
13 Campbell H, Surry SAM, Royle EM. A review of randomised controlled trials published in *Archives of Disease in Childhood* from 1982–96. *Arch Dis Child* 1998;79.192–7.
14 Raffles A, Ropel C. Non-invasive investigations are also helpful if permission for a necropsy is refused. *BMJ* 1995 April 1;310:870.
15 Chiswick M. Perinatal and infant postmortem examination. *BMJ* 1995;310:141–2.
16 Snowdon C, Garcia J, Elbourne D. Making sense of randomization: responses of parents of critically ill babies to random allocation of treatment in a clinical trial. *Soc Sci Med* 1997;45:1337–55.
17 Snowdon C, Garcia J, Elbourne D. Reactions of participants to the results of a randomized controlled trial: an exploratory study. *BMJ* 1998;317:21–6.
18 Snowdon C, Elbourne D, Garcia J. Zelen randomization: attitudes of parents participating in a neonatal clinical trial. *Control Clin Trials* 1999;20:149–71.
19 Sirkia K, Saarinen-Pihkala UM, Hovi L, *et al.* Autopsy in children with cancer who die while in terminal care. *Med Pediatr Oncol* 1998;30:285–9.

Chapter 7

Embedding a qualitative approach within a quantitative framework: an example in a sensitive setting

Claire Snowdon, Diana Elbourne and Jo Garcia

Words are but images of matter, to fall in love
with them is to fall in love with a picture
Frances Bacon, 1561–1626

Introduction

Quantitative and qualitative research methods have been regarded historically as methodological opposites. The metaphor of the battleground has commonly been used to characterise the debate on the legitimacy of the methods and validity of the data produced, with opponents being seen as 'paradigm warriors' (Tashakkori and Teddle, 1998; Oakley, 2000). While quantitative researchers are often said to charge qualitative research with being unscientific and subjective (Pope and Mays, 1995ii), Oakley (1998) has argued that 'notions of experimentation, random allocation and quantitative methods are like a red rag to a bull for many social scientists'. Although there is still some suspicion between the camps, there is a growing movement towards drawing upon the two approaches to produce research that is richer, more sensitive and adds to knowledge in a more effective way than with one method alone (Pope and Mays, 1995i; Kelle, 2001). An area in which cooperative research is flourishing is the randomised controlled trial (RCT), 'the epitome of the quantitative method' (Pope and Mays, 1995i). In the past thirty years, there has been a move towards integrating quantitative and qualitative approaches to understand better the conditions created by the use of RCTs. As a result, RCTs are now providing the context for a progressive and developing field of research.

Qualitative research and the randomised controlled trial

Randomised controlled trials can provide the most reliable and unbiased form of scientific evidence for assessing the relative effectiveness of different treatments. Theoretical discussions and reflections of ethicists, clinicians and trialists indicate that the experimental methods used in RCTs result in a major shift in the basis of care: individualised care is replaced by random allocation of treatment, participants may receive placebo, they may be required to undergo additional tests or monitoring. Such a shift may not be particularly significant in trials in relatively benign settings, such as interventions in minor ailments and information-giving processes. Many trials, however, are involved in pushing forward the boundaries of care in life-threatening or life-changing situations, such as cancer treatment, obstetrics and intensive care. In such settings, where experimentation and life events are brought together, even the smallest change in practice may affect outcomes or alter fundamentally the experiences of those involved. RCTs are

essentially quantitative studies with the potential to change people's lives.

Given the primacy of the quantitative methods involved, RCTs could be considered diametrically opposed to qualitative methods of interview and detailed analysis. Nevertheless, scientists who carry out RCTs are increasingly working with qualitatively-orientated colleagues and an entire field of research has arisen to understand better the impact of research on participants and to improve the quality of trials. Despite this movement, it is commonly stated in research papers that little attention has been paid to the views of those involved in trials. There is, in fact, a substantial literature which has, over time, provided a growing understanding of many facets of trial participation, and which has increased in both sophistication and methodological rigour. Trialists and other researchers have placed a range of almost eclectic information derived from a wide variety of sources and methods into the public domain. There are, for instance, simple elements of trial data, such as correlations between demographics and acceptance or refusal rates (van Bergen *et al*, 1995), observations of trialists drawn from their experiences with patients (Dobkin, 1990; Walterspiel, 1990) and with colleagues (Klein *et al*, 1995), and many questionnaire-based and, more recently, interview-based studies in the field. The literature has been reviewed from various perspectives — Edwards *et al*, 1998 (ethics of trials); Ross *et al*, 1999, and Cox, 2003 (barriers to participation); Sugarman *et al*, 1999 (informed consent); Ellis, 2000 (attitudes to participation) — and is drawn upon below.

Typically, the earlier research on RCTs was not qualitative, or used qualitative data in a rather limited way. There were a number of studies that tried to gain an understanding of broad issues, such as general views of research and why people did or did not participate in RCTs (eg. Hassar and Weintraub, 1976; Barofsky and Sugarbaker, 1979; Henzlova *et al*, 1994). Rather than considering the particular conditions created by individual trials, studies often recruited samples of participants or non-participants (Penman *et al*, 1984) and professionals (Taylor *et al*, 1994) from several different trials, exploring elements of participation as if the trials constituted a single, coherent entity. Studies involving members of the public (Cassileth *et al*, 1982; Kemp *et al*, 1984) or patients with no experience of trial participation (Llewellyn-Thomas *et al*, 1991; Mettlin *et al*, 1985; Saurbrey *et al*, 1984) produced data on attitudes to trials that were essentially hypothetical.

Some researchers did explore the conditions of individual trials (Henzlova *et al*, 1984; Howard *et al*, 1981). An important theme in both early and more recent research is assessment of patient-centred obstacles to recruitment (Smith and Arnesen, 1988; Tait *et al*, 1998; Mohanna and Tunna, 1999; Dorantes *et al*, 2000; Jenkins and Fallowfield, 2000; Salomons *et al*, 2002) to try to explain why the trials involved had failed and/or to improve future recruitment rates. Some trialists reported on the impact of the views or behaviour of physicians on the progress of their trials (Tognoni *et al*, 1991; Klein *et al*, 1995). Klein *et al* (1995), for example, found that obstetricians involved in a trial of episiotomy frequently overrode random allocation where it conflicted with their own judgement of the management of labour. Some trialists reported elements of their trial data that shed some light on patients' reactions to the constraints of the research setting. Abramsky and Rodeck (1990) reported drop-out rates due to patient dissatisfaction on allocation in a trial comparing chorion villus sampling (CVS) to amniocentesis, and Williams *et al* (1980) reported poor compliance in a trial on ambulation in labour. It became clear that if a trial is not acceptable to professionals or does not meet patients'

needs, it may be doomed to fail with low levels of recruitment or high drop-out rates.

Although some of the earlier work was limited, and methods of reporting data have at times been problematic (see Edwards *et al*, 1998, for a critique), the insights gained from the early studies and the reports from trials provided the basis and impetus for a wave of qualitative studies, and over the years much ground has been covered. Qualitative researchers developed an interest in understanding more about exactly how trials influence the experiences of those involved. As the reports described above demonstrated, the factors that render a trial attractive or unattractive to patients, or to those responsible for recruitment, may not be immediately obvious to those involved in running a trial. Uncovering these factors and valuing participant experiences became an area for some of the earlier qualitative studies. Ryan (1995), for instance, used in-depth interviews to understand the difficulties for men participating in an HIV trial and found that a particular problem for participants was having to visit the clinic for the trial. These visits made participants' HIV status explicit to other attenders, and implied sexual orientation. Some asymptomatic participants were disconcerted by encounters with other attenders in a more advanced stage of the disease, thus making trial participation difficult, or even unacceptable.

Informed consent is central to the ethical management of RCTs and the study of the quality and meaning of consent has grown over the years. Although there are many questionnaire-based studies (eg. van Stuijvenberg *et al*, 1998; Tait *et al*, 1998; Ferguson, 2002; Burgess *et al*, 2003), there has been a rise in the number of interview-based studies that have explored this area (eg. Gray, 1975; Appelbaum *et al*, 1987; Snowdon *et al*, 1997, 1999; Featherstone and Donovan, 1998; Cox, 1999, 2000; Mason *et al*, 2000; Featherstone and Donovan, 2002; Glogowska *et al*, 2001; Mills *et al*, 2003). Whilst qualitative data can be used to add breadth to quantitative data, in these circumstances they have proved to be invaluable in allowing a deeper, more meaningful understanding of circumstances that could not have been tapped by quantitative methods alone. This is demonstrated by Featherstone and Donovan (2002) who carried out in-depth, semi-structured interviews with men who had been offered participation in a urology trial. They found important misconceptions about the trial through their analysis and argued that a structured questionnaire would have been an inappropriate and potentially misleading tool, given the subtlety of the data generated. '[I]t is likely that the majority of these participants would have been shown to be aware that they were taking part in a trial and to have understood some or most of the basic aspects of the design.'

Whilst researchers have frequently commented retrospectively on one trial to improve practice in subsequent trials, more recently qualitative research has been carried out to guide and effect practical changes in an existing trial. Donovan *et al* (2002) carried out a radical qualitative study using action-research methods in which men were randomly assigned to different recruitment procedures for a prostate-treatment trial. The results of the findings from in-depth interviews, analysis of the audio-taped recruitment appointments, and follow-up interviews brought about crucial practical changes in the management of the trial. They found that there were difficulties for the professionals involved in recruitment in discussing the basis for the trial (uncertainty over treatment or 'equipoise') and in presenting treatments without bias or terminology that would be subsequently misinterpreted by participants. This information was used to modify the trial procedures. Not only did the insights from the qualitative study

bring about important changes to the information processes to promote participant understanding, the trial itself also benefited from an increase in the randomisation rate from 40% to 70%. The authors argue persuasively for the value of their approach: 'qualitative research methods applied in combination with open minded clinicians and flexible or innovative trial designs may enable even the most difficult evaluative questions to be tackled and have substantial impacts even on apparently routine and uncontroversial trials'.

The use of qualitative research to aid interpretation of the results of trials also marks a significant milestone in the collaboration between trialists and qualitative researchers. Describing their research as 'a multimethod approach', Glogowska *et al* (2002) used questionnaires and interviews with parents of preschool children involved in a speech and language therapy trial, and combined these with data from the RCT. The quantitative trial results suggested that the trial had shown the intervention to be ineffective. The qualitative study demonstrated parents' perceptions of important advantages, as well as limitations, that the authors felt that they 'could only have surmised from the pragmatic trial alone'.

The growth and increase in the quality of qualitative studies in this area of experimental medicine is important. People have been participating in RCTs for over fifty years and still further research is necessary to understand better many aspects of their perspectives. This is especially the case in trials in particularly sensitive settings, such as labour and delivery, surgery, mental health care, the treatment of life-threatening illnesses or emergency settings, where potential participants or their proxies may be expected to be particularly vulnerable. It is precisely because areas such as these are so powerfully charged, both emotionally and politically, that research into attitudes to, and experiences of, participation is sorely needed but difficult to implement. The integration of two types of research in the one setting is challenging. It requires political will and dedicated co-operation between researchers from diverse professional backgrounds (Chalmers 1998).

This chapter provides an extended description of a challenging aspect of a qualitative study, that is recruitment and interviews with bereaved parents involved in an RCT in the setting of neonatal intensive care. Trials in this highly stressful setting can be particularly difficult (Manning 2000) and where babies go on to die parents are often especially vulnerable. The chapter focuses on the development of our research processes, some illustrative findings (researching research) and reflections upon parental involvement in our own research (researching research that researches research), showing insights from our qualitative approach.

The ECMO qualitative studies — a developmental approach

The first in a series of qualitative studies assessed trial participation from the perspectives of parents of babies involved in the UK Collaborative Trial of Extra Corporeal Membrane Oxygenation (ECMO) (Snowdon *et al*, 1997). The trial involved critically ill new-born babies, and compared two methods of life-support: 'conventional' management (involving ventilatory support) versus oxygenation of the blood via an external circuit (UK Collaborative ECMO Trial Group, 1996). Subsequent studies were carried out with an additional group of ECMO trial parents (Snowdon *et al*, 1998,

1999), with health professionals and parents linked to four trials (see below), and with health professionals and parents of babies undergoing hypothermia and ECMO in a pre-trial study (Snowdon *et al*, unpublished). At each stage of the process there were critical insights which both informed the findings and shaped subsequent research topics. These various studies therefore represent an intellectual and a methodological progression.

The early studies involved only parents of surviving babies. At the time the published research on the views of participants in trials was more limited and there was little to guide research in such a sensitive area. Whilst research on bereavement was available, it was important to consider that trial participation was an added and potentially complicating dimension. It was very difficult to predict the likely impact of some of the discussions required for the interviews. It was decided that although the views of bereaved parents were potentially valuable, it was inappropriate to include these parents when the field was so limited and when the research team was exploring essentially new research territory.

The most instructive finding from the first study was the demonstration of the difficulties that parents of surviving babies had in describing aspects of the trial. It was clear that even where parents were familiar with RCT terminology, they were often uncertain about the nature of randomisation and the rationale behind its use. Whilst the stressful and emotional circumstances of the discussion of the trial are likely to have hindered the transmission and receipt of complicated information, it was interesting to find that there were some consistent misconceptions about the trial that recurred in different interviews around the country. It seemed likely that some particular accounts may have had their roots in formal and informal conversations with staff involved in the trial. Some were natural and common sense responses to crucial gaps in knowledge. For instance, some parents (understandably) did not have an appreciation of medical uncertainty as the basis for the trial. They then sought other means to explain the use of randomisation, such as a means of circumventing a difficult decision for doctors to choose which treatment a baby should have, or as a means of deciding between babies competing for scarce ECMO beds. Where the evaluative nature of a trial was not clear, some parents believed their sick baby was deprived of a known life-saving therapy. Allocation to conventional management was taken by some parents to mean that their baby had been 'rejected'. Views such as these have implications both for the management of trials and for the well-being of participants and their proxies.

The subsequent ECMO qualitative studies also gave useful insights, allowing the team to develop further research questions and methodological approaches. They showed that parents largely valued their involvement in a trial, in particular, being informed about the trial once the results were available (Snowdon *et al*, 1998), and that it was possible to explore with parents their attitudes to methodological issues, namely an alternative approach to consent for trials (Snowdon *et al*, 1999). The studies provide information which may be used by trialists to reflect on management issues for their research.

The results of the ECMO Trial studies have been widely disseminated, both in publications and presentations. A very frequent response from audiences, and in print (Braunholz, 1999; Manning, 2000), has been to comment that results may have been different had bereaved parents been included in the study. As researchers we were frequently called upon to defend the decision to include only parents of surviving babies in this earlier research. Although this decision was described as being based on 'perfectly understandable ethical reasons' (Braunholtz, 1999), it was clear that there

was a need to understand the impact of trial participation on those with a very difficult outcome, and to assess their experiences both at the time and with hindsight. It was decided that the team had gained sufficient experience and understanding of the field to incorporate an assessment of the views of bereaved parents into a subsequent study.

The study of views of participants in perinatal trials

For this study the wider aim was to examine issues associated with trial participation from the perspectives of doctors, midwives, neonatal nurses, parents of babies that survived (including parents who had declined trial participation) and parents of babies that died. The setting was two neonatal RCTs, the INNOVO Trial (Field *et al*, (submitted); www.innovo-trial.org.uk) and the CANDA Trial (Ainsworth *et al*, 2000), both of which involved critically ill babies with a high risk of mortality; and two antenatal trials, the TEAMS Trial (Brocklehurst *et al*, 1999) and ORACLE (Kenyon *et al*, 2001a; Kenyon *et al*, 2001b). Although the original aim was to carry out interviews with bereaved parents who had been offered any of the four trials, difficulties arose in some centres where access to bereaved parents was not permitted, especially in the antenatal trials. The decision was eventually made to approach only parents of survivors in the two antenatal trials and so the following information is based on parents involved in one or both of the two neonatal trials.

A sensitive setting

The interviews for this research can be considered to be sensitive in a number of ways. Firstly, they involve potentially vulnerable people and every effort must be made to offer them respect and protection, even if this means accepting a degree of compromise in the data.

Secondly, the interviews are sensitive because of the subject under exploration. Not only is information about trial participation embedded within the story of the birth and death of their baby, the interviews also needed careful management because they involved exploration of the potential of the RCT for changing the parental experience. This could be in relatively small ways, such as satisfaction with information giving, or it could be in explosive and life-changing ways, such as the feeling that doctors were denying a dying baby a potentially useful treatment.

Thirdly, we had to be aware that the study itself had the potential to change the parental experience. Our earlier research had shown that parents could often use the terminology associated with a trial and appear to have a good appreciation of trial methods, but on further exploration could hold co-existing views which were at odds with the experimental rationale, such as feeling that their doctor influenced randomisation in some way to ensure access to an experimental treatment for their baby. As interviewers we had to be careful to explore parental views without interrupting their coping mechanisms, and without revealing information which might be difficult to integrate into their accounts of events, such as the random nature of the allocation. If parents felt reassured that a doctor had selected the best treatment it would be inappropriate to introduce during an interview the role that chance had played in events.

The course of the study

This degree of sensitivity affected the course of the study in significant ways. Although there had been concern expressed in the field that research that did not represent bereaved parents was fundamentally flawed, it proved to be extremely difficult to secure co-operation with other professionals and to recruit this element of the sample. From the start of the study there was a tension between support for the need to assess the impact of RCTs on bereaved parents, and concern that in researching their views, the qualitative study could undermine their wellbeing. The means by which potential participants were approached and invited to join the study was necessarily modified during the study in response to the concerns of research ethics committees (RECs) and clinicians, and to the practicalities of gaining access to the parents. REC approval was a lengthy process, often involving several RECs with different responses, and negotiations with representatives of hospital bodies (such as the Caldecott Guardians) and with the staff involved also proved to be highly problematic at times. Some clinicians were very supportive and clearly wished to see the data in the public domain. They offered much support and advice. Others, however, had misgivings. One clinician advised colleagues in a meeting not to join unless they were prepared to find themselves under media scrutiny once results were available. In some cases a departmental decision was made to permit the study in their centre, but individuals were uncomfortable and withheld access to bereaved parents once REC approval had been given and the study was underway. It seemed that we were attempting to provide the research data that everyone agreed was necessary but few felt able to support in practice. Whilst it was clear to all involved that the qualitative research must not be to the detriment of the parents involved, ultimately these concerns limited the potential for the study to answer the research questions posed.

Where an approach to bereaved parents was agreed, this was negotiated by the local hospital consultant who would raise the possibility of contact with the research team either at a bereavement visit, by letter or by telephone, according to local preferences. This required a degree of methodological flexibility and necessitated a number of modifications to multi-centre and local REC approval. If parents gave permission for this contact, they were sent a letter regarding the qualitative study.

In a gradual and slow process, twenty-one letters were sent to bereaved parents (sixteen INNOVO and five CANDA). No reminder letters were sent, at the request of the RECs. Eleven interviews were carried out with eighteen parents of thirteen babies who had died (seven INNOVO and four CANDA). The interviews were carried out by CS (8), MM (2) and DE (1). All interviews took place in the parental home, were tape recorded and fully transcribed, with the exception of one tape which was corrupted. Given the small numbers it is inappropriate to use these data to attempt to generalise about what parents might think. Instead, the parental experiences can be used to encourage reflection on research processes. Four cases are presented here in detail, two of which give some insights into the experiences of those with difficult outcomes in a quantitative study, and two which helped us to reflect on our own management of qualitative research.

Reflections on participating in the quantitative study (the INNOVO Trial)

In the ECMO qualitative study interviews, parents described their reactions to an extremely distressing situation. Their babies were critically ill and a doctor described an intervention that could potentially make a difference, but which was potentially associated with some as yet unevaluated risks. The trial compared the intervention to the control of continuing with standard care; allocation to receive standard care was almost invariably met with emotions ranging from disappointment to extreme distress. It was common for the parents of babies allocated to ECMO who survived to comment that it would have been very difficult to cope had the baby been allocated to the standard care and had not survived. This particular issue was also frequently raised by professionals when discussing the trials, but there was no research evidence to aid understanding of the possible perspectives of bereaved parents in this position.

The inclusion of bereaved parents from the INNOVO trial offered an opportunity to start exploring the issue of the impact of trial participation on those with a difficult outcome. This trial involved a relatively simple intervention, adding a gas (nitric oxide) to those already received via a ventilator. In contrast, in the ECMO trial, the intervention involved transfer to another hospital and a high-technology, highly invasive life support system. In the early stages of the study we were repeatedly advised that although both trials involved critically ill babies and a comparison with standard care, the interventions were so different that the circumstances were not comparable. In fact, the experiences of the trial reported by parents were remarkably similar. The crucial factor was the potential of an intervention, whatever that might be, to save a baby's life. Parents in the INNOVO Trial, just like those in the ECMO Trial, reported feelings of elation and relief at allocation to receive the experimental arm (nitric oxide) and disappointment, anger and regret on allocation to the control arm of the trial. Parents of survivors similarly expressed their sympathy with bereaved parents.

Eight of the interviews involved bereaved parents of babies enrolled in the INNOVO Trial (the CANDA Trial involved a comparison of two very similar treatments and is not considered in this section). Four of the babies were allocated to receive nitric oxide, three were allocated to standard care (ie. no nitric oxide), and in one case the parents did not recall the allocation. Those who received the treatment were very positive about the trial and felt that they could be confident that everything had been tried in order to save their baby. They felt both that the doctors had exhausted all options, and that as parents they too had exercised their responsibilities and ensured that all avenues had been explored. It is possible that a larger sample might uncover parents who worried that their decision to permit the use of an experimental intervention had a role in their baby's death but this was not the case here. The experimental nature of the drug was almost irrelevant, with one mother stating: 'it didn't really matter that it was a trial, it was a fact that anything would help'. Those who did not receive nitric oxide were however in quite a different situation.

Dawn and Peter[1]

Dawn gave birth to twins six weeks early. They were both in a poor condition and had contracted an infection (no further details given in the interview). One baby, Amy, was

1. All names are pseudonyms.

enrolled in the INNOVO Trial and was allocated to the control group. Both babies were christened in hospital and Amy died after six days. During the interview Dawn and Peter took turns holding their surviving baby, Catherine (who had not been eligible for enrolment in the trial) who is affected by a number of health problems. Sometimes she slept and sometimes they stroked or fed her. They both displayed a lot of affection which may have helped them as they recalled painful times. It may also have helped to avoid eye contact with the interviewer and gave everyone a helpful channel for positive comments.

Their description of the events surrounding their consent to join the INNOVO Trial was somewhat disjointed. They described how the consultant who offered the trial to them had characterized the situation. Dawn repeatedly focused on what was for her the most important element of what she said the consultant had told them, 'It's her last chance. If she doesn't get it she'll probably die anyway, ... but if she gets this she's getting a last chance.' Peter gave a description of the consultant's explanation of why the use of nitric oxide was randomised as, 'some doctors think it does work, some think it's nothing to do with that, the babies just pick up'. It seemed as if the drug was being randomized because doctors could not agree whether it was useful or not. Whilst this is not at all far from the truth, there was a subtle implication that this was largely a way to manage uncertainty. They did not present the trial as in any way evaluative or as a form of limiting exposure to an untested drug and this was a crucial element in their description of their experiences. Dawn felt that, 'everyone should get the chance at it.'

The news that Amy had been allocated to standard care was devastating. With the experimental element of the intervention out of the equation, and with nitric oxide being seen as the last available route, the parents felt that they were left 'just sitting there watching her die'. They felt that the process was particularly cruel, 'a totally horrible thing to do'. The key element in their experience was a sense of having a potential solution dangled in front of them, a solution which they felt their doctor was powerless to access. They felt that he too was upset at the allocation. Peter made it clear that he did not hold their consultant responsible, saying 'we never blamed [him]. It's somewhere else along the line isn't it where all that comes from. It's not the doctors at the hospitals.'

There was a definite sense that an important option had not been explored. Dawn said, 'they'd done everything they could but that random thingy.' At times this interview felt quite desolate and the loss of their baby was completely at the forefront of their lives. Poloroid photographs of the twin girls in their incubators had been substantially enlarged and were on display, an intensely sad reminder of the circumstances of their loss. The most poignant comment in the interview came from Dawn, in making a point that she returned to several times. 'That's what goes on in my head, you know, if she would have got it, maybe she might be still here.'

Erica and Howard

During pregnancy Erica and Howard were told that their baby was affected by hydrops. At thirty-four weeks Erica was hospitalised and they were made aware that the prognosis may be poor. After several days Erica went into spontaneous labour, and underwent an emergency Caesarean section with a general anaesthetic. Howard was given a brief glimpse of the baby, Jenny, as she was taken straight to neonatal intensive

care. Although she was very swollen, he said that he felt that she was 'beautiful'. He spent time with her and came to see that she was 'very damaged' and did not really feel that there was much that could be done. He described her chances as 'twenty to thirty per cent' and very much felt that the deciding factor would be whether or not Jenny decided to fight for her survival, arguing that 'it was just a case of monitoring her, it was all in Jenny's court really, there was not much that they could have done really apart from drain and monitor, and then if Jenny wanted to make a go of it they could have done more.' There was however still a sense at this stage that she may survive, as they were told that the first twenty-four hours would be crucial for her.

In the meantime, Erica had developed a bowel infection. She had not seen the baby and although she had had some feedback she found it difficult to remember and could not appreciate what was happening to Jenny. Howard left the hospital and at 5.00 am Erica was woken by a doctor to discuss the possibility of enrolling Jenny in the INNOVO Trial. Jenny was critically ill and declining rapidly. A call was made to bring Howard back to the hospital, but there was no time to wait for him to arrive. Erica had to listen to the information in her bed and decide about the trial on her own. She was asked to give her decision in five minutes. She said 'I was drugged up because I was on morphine, I was sort of out of it, I didn't know what was going on.' She describes the conversation and her view of the trial as follows:

> *He came to me and said 'baby isn't well so we can do this trial' he said 'but there is only sixty in the country' or something 'and it's like picking you out of a hat', and I turned round and said 'What about her chances?' and he said to me, 'There isn't really much hope.' He said, 'She's deteriorating fast but it's up to you what you want to do' and I said, 'Go for it!'*

Erica's account of the basis of the trial includes the availability of a treatment which may or may not benefit their daughter, and that it might not be accessible. She saw the trial as involving a treatment which might help. Her focus in the discussion about the trial was solely on the potential of nitric oxide to help their situation.

> *As soon as he said that, the main thing that was stuck in my mind was anything that would help her then yeah go for it, it gave her a better chance. ... [E]ven though it was her last chance there was still hope.*

Once she gave her consent the allocation was made very quickly and Jenny was to receive nitric oxide. Howard arrived at the hospital and they went together to see her. In fact, Jenny deteriorated further and nitric oxide was not used. Howard described the timing:

> *I got there for about twenty past five and ... Erica ... [had] already given the nod about the trial about ten past and at half past five you were been wheeled in to say our goodbyes, by half past seven Jenny was dead.*

There are important technical preparations which have to be made in order to administer nitric oxide for the trial. From the details given in the interview it is not possible to say whether there was simply not enough time to make these preparations or whether Jenny

was ultimately too sick to undergo any changes to her circumstances. Erica and Howard were however left with the impression that the trial involved allocation to a ventilator which had to be brought to the hospital. They felt that there had not been time to get the ventilator to them.

The parents were frustrated at the timing, feeling that they had been asked about the trial at such a late stage, despite the fact that Jenny's condition was clear from a week before she was born. Erica felt that she would have preferred to read material in advance so that a decision could have been made at an earlier stage. When Erica finally saw her daughter she realized just how ill she was. Erica accepted that she would not now receive nitric oxide and they chose to have Jenny removed from her ventilator. She found herself reflecting on their earlier fight to save her:

> *When I saw her I thought is it worth it, I mean as to what problems will she have if she does survive, there is a chance that she will be blind, they thought she had brain damage and I thought no you know what are her chances in life realistically. There's no point in prolonging her life for another couple of years, if it was going to happen I'd rather it happened there and then.*

For Howard, who described himself as 'bitter' and 'really disappointed', there was the sense that they had been lucky to gain access to the trial but that an opportunity had been missed, given what they had been told about the importance of the first twenty-four hours.

> *There was maybe one in sixty chance of getting this trial and it was all done by draws and everything else and I was thinking, you know, by the time you've decided who is going to get the trial at this late stage with Jenny she'd gone anyway. ... [I]f we'd maybe been offered any time of day before when Jenny had a chance it could go either way, great, fair do's, [but] by then she was virtually gone, ... she was damaged beyond belief, so even if you know, they would have had the chance to put her on the machine it wouldn't have done her the slightest bit of good anyway, she was gone, she was well and truly gone.*

Once home, Erica found a website on nitric oxide which made her feel that Jenny may have survived had they been offered the trial earlier. She said that she was feeling, 'What if...?'. In retrospect, Howard described the trial as potentially offering them something important but that ultimately it may have had 'a detrimental effect' in raising unrealistic expectations.

Reflections on participation in the qualitative study

These accounts demonstrate the sensitive nature of the qualitative study. Given their experiences, the topic under discussion and the concerns of some consultants who were approached for assistance with the study, it is important to reflect on participation in the qualitative study itself.

The recruitment process

The process of making the initial contact with parents was potentially problematic as there was no information as to how parents would view the offer of joining the study. After much consultation, including discussion with the parent members of the project's advisory group, it was decided that involving their consultant was crucial. Not only did this allow consultants to feel involved in the process and to offer them some reassurance that inappropriate contacts were not being pursued, it also lent a degree of credibility to the study which may have made parents feel more secure. This approach meant, however, that the initial sampling process was highly selective. Consultants were protective of the parents and not surprisingly did not give permission for approaches to families whom they expected would be particularly stressed. It was also unlikely that they would have recommended contact with those with a poor relationship with their unit. Once parents were invited to participate there was another level of selection as various parents decided whether or not to participate.

Whilst there was a concern that parents may have felt a degree of obligation to their consultant, it was reassuring that the study achieved very similar rates of agreement to participate when bereaved parents were compared to those whose babies survived. In half of the cases bereaved parents chose not to return a reply slip and were not contacted again. Although it may have resulted in a higher response rate we accepted the loss of potential data as a consequence of an appropriate ethical safeguard.

The interviews

The interviews were varied in tone, from highly charged to very comfortable. Some parents cried during the interviews and were always given the opportunity to stop for a break or to discontinue. None chose the latter. Some had a very serious tone and it was clear that we were tapping the most dreadful of experiences with which parents were still struggling. Some were more relaxed and there was a strong sense that although difficult, they felt able to talk and wanted to make their experiences known. It was obvious that the interview was a big event for which parents had often mentally prepared themselves, or had made practical preparations like arranging for their children to be looked after so that they were free to talk. Only one mother seemed very relaxed about the process. She had forgotten that the interview was booked and opened the door in her pyjamas. She was clear that she still wanted to continue and the interview went ahead while she ate breakfast. Whatever the style and tone of the interviews, parents generally seemed very committed to contributing to the research and were interested to know about our findings and the views of others with similar experiences.

As part of a monitoring process, parents who were interviewed were left a brief questionnaire which asked how they had found the interview. It was clear that the interviews could be difficult but that this was not unexpected or unacceptable. Parents seemed to welcome the opportunity to talk and one mother said that she was 'glad that I had the courage to take part'. This gives a flavour of the approach of a number of the parents, who felt that they wanted both the opportunity to talk and the chance to make their opinions known. The need to be heard was crucial for one couple, Linda and Colin, and their inclusion in the study was extremely valuable in terms of the insights it gave in to the importance of affording vulnerable groups every opportunity to opt in as well as

to opt out of research into their experiences. The interview with Judith and Sean caused the researchers to worry that parents may have found the interview too stressful, exactly the concerns of some professionals.

Linda and Colin

As we were negotiating access to parents in one of the trials we were told of a consultant's decision to exclude a couple as their experience of neonatal intensive care and involvement in the trial had been extraordinarily harrowing. It was a common occurrence for such a decision to be made, but in this instance the decision was unexpectedly revoked after the consultant had a further discussion with a clinical colleague. The couple were approached, agreed to see a letter about the study and sent a signed consent form for the interview by return of post. With some knowledge of their difficult history the interviewer (CS) felt a degree of trepidation and concern that this might prove to be the most challenging interview of the study. It did, in fact, prove to be possibly the most instructive interview in the study.

Linda conceived triplets after assisted conception but her babies were delivered at twenty-four weeks after several attempts to stop labour. They were born at the lower limits of survival. The birth of the babies was complicated and confusing and the parents were left with unresolved questions about the delivery process. All three babies died over an extended period, the last baby quite unexpectedly. The parents had permitted enrollment in the CANDA trial for all three babies. They did not know to which treatment groups the babies had been allocated. The main value of this interview was that it very clearly demonstrated how much these parents wanted to be involved in both the trial and the qualitative study. They were, however, almost excluded from the qualitative study. During the interview they were asked whether they felt that it is appropriate to feed back trial results to bereaved parents, given that it might involve emotionally difficult information. Their views were very clear; Linda was almost offended at the suggestion that they should be treated differently from other parents.

> *I wouldn't like to think that because our babies died ... they feel they couldn't approach us and give us the results of the trial, whereas other folk that's been in the trial whose babies have survived, ... they would find it easier to get in contact with them and give them the result. ... They're quick enough to come to you to enrol in the trial. And just because your babies didn't survive doesn't mean to say that you're not interested. ... Why shouldn't you get the results!*

At the end of the interview they gave permission to use their information even though it was pointed out that their unique situation would probably identify them to those involved in their care. They spontaneously suggested that we could access their medical record if that would help in any way. Although this was not necessary for the qualitative study, it was a measure of their desire to co-operate and provide useful information for the research.

Judith and Sean

This was an unexpectedly difficult interview as it was not clear until the interviewer arrived at the parents' house that Judith was approximately seven months pregnant. Their first child had died unexpectedly at full term having contracted a streptococcal infection and Judith was clearly having a stressful time, worrying that they may repeat the experience. The interview notes prepared immediately afterwards by CS capture some of the atmosphere.

> *I didn't feel that any of us really relaxed and I felt uncomfortable with some of the questions that I asked. Although Judith cried during the interview, she did not want to stop. Sean had left the television playing cartoons with the sound turned down which he was watching when I arrived. It occasionally caught his attention during the interview and at those times was less engaged with the interview. There were some times when I don't think I explored things as well as I can when people are engaged with the questions or seem more comfortable. I think the fact that they did not have a healthy child left an almost unbearable feeling of sadness. When I left, for the first time ever, I regretted having done the interview and found myself questioning whether I had put this couple through something unpleasant to no benefit to themselves.*

The post-interview questionnaire proved a valuable resource in resolving some of these concerns. In answer to the question, 'How did you feel afterwards?' Judith wrote 'A little upset. It brought back a lot of memories but I didn't regret talking about it'. Both Judith and Sean also ticked that there was nothing they disliked about the interview. The observed tension, and the parental willingness to tolerate emotional discussions, is a measure of their commitment to the research. Researcher concerns are an indication of the difficulties that outsiders have in tapping these most difficult experiences, even if those most affected do wish to offer their testimonies.

Although it seemed at the time that this interview had not flowed as well as others do, and it was a concern that through some degree of interviewer reticence more limited data had been collected, on analysis the interview proved particularly valuable in substantiating the views of parents in other interviews. Like many parents, Judith and Sean expressed their sense that nitric oxide represented the last option for their baby, with the comment, 'There wasn't any other treatment, it was either that or nothing really.' Judith said that although she felt some degree of caution about the fact that they would be participating in research, something 'experimental', 'we agreed to do it because we wanted to just try every, anything.' They felt very positive about the fact that nitric oxide had been tried and that had their son's infection not been so virulent, it may have saved him. This seemed to be important in both of their accounts, possibly a valuable coping mechanism. Sean, who gave a very clear description of how nitric oxide was thought to work, and who knew that there was the possibility of side effects, described how he felt positive about his involvement in the trial: 'he's been given every chance to live that he could have had then. Without the trial would we be sitting here thinking, if he'd have had it, would he be alright?'

Summary

The RCT has become a crucial tool in the move towards evidence-based medicine in the NHS and qualitative methods are increasingly being accepted in the medical community as another legitimate form of evidence (Jones, 1995). We are now seeing a significant development in which qualitative data are collected within the framework of the RCT (as opposed to explaining phenomena from an external perspective). The use of such data alongside quantitative data represents a shift to a more holistic, integrated view in which an intervention is not seen in a narrow clinical focus but in a social context. It is part of the larger trend reported here and reflects a cultural shift towards valuing the views of those who experience interventions first hand (Muir Gray, 1999).

The four cases reported here give important glimpses into the lives of those who are living with the consequences of extremely difficult experiences, and some understanding of how a trial has impacted upon their lives. They represent a group whose views have not been examined previously but who are the focus of much professional concern. Their testimonies can be used to shape future research on neonatal trials. The interview with Linda and Colin was, for instance, particularly useful in highlighting their view that it is important not to exclude bereaved parents from inclusion in an RCT because their baby has died. Clearly there is no follow-up of a baby to carry out, but bereaved parents who wish to have some continuing involvement in a trial, can be given the option of inclusion in any feed-back of results, can be sent newsletters and can be included in research in selected area such as any economic follow up (costs associated with an intervention) or any research which collects their opinions. A broader assessment of parental reactions to inclusion in such studies would be an appropriate area for a qualitative investigation.

The finding that some parents in this setting were keen to be heard is also valuable in methodological terms. It tells us that qualitative research in this area is possible and appropriate. The accounts of Dawn and Peter, and Erica and Howard, are reminders of the powerful emotions that researchers are tapping and the need for care both in trials and any associated qualitative research. There is a strong impulse to protect those who are bereaved by not raising the subject of their difficult experiences. Bereaved parents do, however, live with grief and not including them in research does not take that away. It does however take away their voice and denies them the chance to talk about experiences to an interested listener. Murray (2003) has argued that although qualitative researchers are often discouraged by 'the task of connecting with a vulnerable population and asking them to disclose information about a sensitive aspect of their lives', there can be important 'therapeutic benefits' for interviewees. We support this argument, given the positive comments made by the many parents who have taken part in our studies, but we would also wish to add that it is important not to lose sight of the potential for harm in unexpected circumstances or in certain cases. All interviews and the questions involved should be justifiable. In our interviews, some parents wanted to describe the moment of their baby's death whilst others were clearly skirting around this subject. It was important to retain the focus of the interview, participation in a trial, and to allow the parents the flexibility to revisit this experience if they so wished, but not to require them to give difficult information which was to some extent off topic. Just as researchers in trials are required to ensure that the inclusion of each participant and each intervention is necessary, it is also the case that qualitative researchers should

try to ensure that each interview for a study represents an important addition to the data, either in opening new avenues of thought or in corroborating and consolidating existing findings.

Final thoughts

The material collected in the course of this part of the study is instructive, even though the sample was not collected in the coherent and consistent approach envisaged, and despite the small numbers involved. It demonstrates the importance of researchers in sensitive situations being responsive to the needs of potential participants, even if this results in certain compromises to the data. There is no doubt that the experiences described in such a difficult study as this will not be representative but we would argue that given the early stage of this element of the research field, there is an ethical imperative to explore and report such data.

At this point in the understanding of the impact of RCTs, the value of the data does not lie in their representativeness. Their importance lies in how they might be used to start to understand some of the various ways in which trial participation can affect the experiences at the centre of the research and to prompt reflection on aspects of trial management. They allow for preliminary but still important insights into the views of parents who have undergone an unfortunately not uncommon experience, but an experience that is at present under-researched. The interviews with Dawn and Peter, and Erica and Howard, not only give insights which can effect practical changes in, for instance, highlighting the possible need for support structures for parents who feel that their baby has been denied a treatment, they also provide examples of how qualitative research can highlight ethical issues which are ripe for discussion. The experiences of Erica and Howard bring to the fore two difficult issues which are highly relevant to clinicians involved in both the delivery of care and recruitment in these stressful circumstances. Firstly, when a baby is almost but not quite moribund, trials can offer a doctor access to an additional and potentially important tool which they hope will reverse their decline. At such a stage in the course of a baby's rapid deterioration clinicians have to make the difficult judgment as to whether such a slim chance of survival offsets the associated decision-making process, the limitations on parental time with their baby, raising possibly false hopes and any, as yet, inadequately evaluated consequences of allocation if they go on to be bereaved. This issue had to be faced a number of times in both the ECMO and the INNOVO trial: in the latter, three babies died before the allocated nitric oxide could be administered (Field *et al*, submitted). Secondly the interview with Erica and Howard highlights the differences between a mother's almost instinctive decision making process before she has seen her baby and connected with the full implications of fighting to save her in a damaged state, and her views on continuation of treatment once this connection has been made.

As so little is known about how bereaved parents experience involvement in trials, any exploratory data, if carefully collected and analysed, can be used to help to guide the direction of future research and to promote debate. The study is an example of how qualitative data can be used to add to knowledge and understanding through prioritising the experience of individuals, and assessing these in their larger social context.

Acknowledgements

The chapter is dedicated to the parents of CS whose own experiences are to an extent echoed here and have, over the years, shaped the research process in important ways.

References

Abramsky L, Rodeck CH (1990) Women's choices for fetal chromosome analysis. *Prenatal Diagnosis* 11(1): 23–8

Ainsworth SB, Beresford MW, Milligan DWA *et al* (2000) Pumactant and poractant alfa for treatment of respiratory distress syndrome in neonates born at 25-29 weeks' gestation: a randomised trial. *The Lancet* 355(9213): 1387–92

Appelbaum PS, Roth L H, Lidz CW, Benson P, Winslade W (1987) *False hopes and best data: Consent to research and the theraputic misconception.* Hastings Center Report April: 24

Barofsky I, Sugarbaker PH (1979) Determinants of patient nonparticipation in randomised clinical trials for the treatment of sarcomas. *Cancer Clinical Trials* 2: 237–46

Braunholtz DA (1999) A note on Zelen randomization: Attitudes of parents participating in a neonatal clinical trial. *Control Clin Trials* 20(6): 569–71

Brocklehurst P, Alfirevic Z, Chamberlain G (1999) *Protocol for the Trial of the Effects of Antenatal Multiple Courses of Steroids versus a single course.* NPEU, Oxford (see http://www.npeu.ox.ac.uk/trials/teams.html)

Burgess E, Singhal N, Amin H, McMillan DD, Devrome H (2003) Consent for clinical research in the neonatal intensive care unit: a retrospective survey and a prospective study. *Arch Dis Child* 88(4): F280–286

Cassileth BR, Lusk EJ, Miller DS, Hurwitz S (1982) Attitudes toward clinical trials among patients and the public. *JAMA* 248: 968–70

Cox K (1999) Researching research: patients' experiences of participation in phase I and II anti-cancer drug trials. *Eur J Oncol Nurs* 3: 143–52

Cox K (2000) Enhancing cancer clinical trial management: recommendations from a qualitative study of trial participants' experiences. *Psycho-oncology* 9: 314–22

Cox K, McGarry J (2003) Why patients don't take part in cancer clinical trials: an overview of the literature. *Eur J Cancer Care* 12(2): 114

Chalmers I (1998) Unbiased, relevant, and reliable assessments in health care. *Br Med J* 317(7167): 1167–68

Dobkin BH (1990) A testing time: a doctor's thoughts on having his patients participate in double blind study of ticlopidine. *Discover* 11: 86

Donovan JL, Mills N, Smith M, Brindle L, Jacoby A, Peters TJ *et al* (2002) Quality improvement report: improving design and conduct of randomised trials by embedding them in qualitative research: protect (prostate testing for cancer and treatment study). *Br Med J* 325: 766–70

Dorantes DM, Tait AR and Naughton NN (2000) Informed consent for obstetric anesthesia research: factors that influence parturients' decisions to participate. *Anesth Analg* 91(2): 369–73

Edwards SJL, Lilford RJ, Braunholtz, DA, Jackson J,C, Hewison J, Thornton J (1998) Ethical issues in the design and conduct of randomised controlled trials. *Health Technology Assessment* 2(15)

Ellis PM (2000) Attitudes towards and participation in randomised clinical trials in oncology: a review of the literature. *Ann Oncol* 11(8): 939–45

Featherstone K, Donovan JL (1998) Random allocation or allocation at random? Patients' perspectives of participation in a randomised controlled trial. *Br Med J* 317(7167): 1177–80

Featherstone K, Donovan JL (2002) 'Why don't they just tell me straight, why allocate it?' The struggle to make sense of participating in a randomised controlled trial. *Soc Sci Med* 55: 709–19

Ferguson PR (2002) Patients' perceptions of information provided in clinical trials. *J Med Ethics* 28(1): 45–8

Field D *et al* on behalf of the INNOVO Trial Collaborating Group. Neonatal ventilation with INhaled Nitric Oxide versus Ventilatory support withOut inhaled nitric oxide for preterm infants with severe respiratory failure: The INNOVO multicentre randomised controlled trial (submitted)

Glogowska M, Campbell R, Peters TJ, Roulstone S, Enderby P. (2002) A multimethod approach to the evaluation of community preschool speech and language therapy provision. *Child Care, Health and Development* 28(6): 513

Glogowska M, Roulstone S, Enderby P, Peters T, Campbell R (2001) Who's afraid of the randomised controlled trial? Parents' views of an SLT research study. *Int J Language Communication Disorders* 36(suppl): 499–504

Gray BH (1975) *Human Subjects in Medical Experimentation: a sociological study of the conduct and regulation of clinical research.* Wiley, New York

Hassar M, Weintraub M (1976) Uninformed consent and the wealthy volunteer: an analysis of patient volunteers in a clinical trial of a new anti-inflammatory drug. *Clin Pharmacol Ther* 20: 379–84

Henzlova MJ, Blackburn BH, Bradley EJ, Rogers WJ (1994). Patient perception of a long-term clinical trial: experience using a close-out questionnaire in the Studies of Left Ventricular Dysfunction (SOLVD) Trial. *Controlled Clinical Trials* 15: 284–93

Howard JM, DeMets D (1981) How informed is informed consent? BHAT experience. *J Controlled Clinical Trials* 2: 287–303

Jenkins V, Fallowfield L (2000) Reasons for accepting or declining to participate in randomised clinical trials for cancer therapy. *Br J Cancer* 82(11):1783–8

Jones R (1995) Why do qualitative research? *Br Med J* 311: 2

Kelle U (2001) Sociological explanations between micro and macro and the integration of qualitative and quantitative methods, forum. *Qualitative Research* 2(1) http://www.qualitative-research.net/fqs-texte/1-01/1-01kelle-e.htm

Kemp N, Skinner E, Toms J (1984) Randomizad clinical trials of cancer treatment – a public opinion survey. *J Clin Oncol* 10: 155–61

Kenyon SL, Taylow DW, Tarnow-Mordi W (2001a) Broad spectrum antibiotics for spontaneous preterm, prelabour rupture of fetal membranes: the ORACLE I trial. *The Lancet* 357: 979–88

Kenyon SL, Taylor DJ, Tarnow-Mordi W (2001b) Broad spectrum antibiotics for spontaneous preterm labour: the ORACLE II randomized trial. *The Lancet* 357: 989–94

Klein MC, Kaczorowski J, Robbins JM, Gauthier RJ, Jorgensen SH and Joshi AK (1995) Physicians' beliefs and behaviour during a randomized controlled trial of episiotomy: consequences for women in their care. *Can Med Assoc J* 156(6): 769–78

Llewellyn-Thomas HA, McGreal MJ, Thiel EC, Fine S, Erlichman C (1991) Patients' willingness to enter clinical trials: measuring the association with perceived benefit and preference for decision participation. *Soc Sci Med* 32(1): 35–42

Manning D (2000) Presumed consent in emergency neonatal research. *J Med Ethics* 26: 249–53

Mason SA, Allmark PJ, Megone C, *et al* on behalf of the Euricon Study Group (2000) Obtaining informed consent to neonatal randomised controlled trials: interviews with parents and clinicians in the Euricon study. *The Lancet* 356: 9247

Mettlin C, Cummings KM, Walsh D (1985) Risk factor and behavioural correlates of willingness to participate in cancer prevention trials. *Nutr Cancer* 7(4): 189–98

Mills N, Donovan JL, Smith M, Jacoby A, Neal DE, Hamdy FC (2003) Patients' perceptions of equipoise are crucial to trial participation: a qualitative study of men in the ProtecT study. *Controlled Clinical Trials* 24

Mohanna K, Tunna K (1999) Withholding consent to participate in clinical trials: decisions of pregnant women. *Br J Obstet Gynaecol* 106(9): 892–7

Murray BL (2003) Qualitative research interviews: therapeutic benefits for the participants. *J Psychiatr Ment Health Nurs* 10(2): 233-6

Muir Gray JA (1999) Postmodern Medicine. *The Lancet* 354: 1550–3

Oakley A (1992) *Social Support and Motherhood.* Blackwell, Oxford

Oakley A (1998) Living in two worlds. *Br Med J* 316: 482–83 (7 February)

Oakley A (2000) *Experiments in knowing: Gender and method in the social sciences.* Polity Press, Cambridge

Penman DT, Holland JC, Bahna GF and Morrow G *et al* (1984) Informed consent for investigational chemotherapy: patients and physicians' perceptions. *J Clin Oncol* 2: 849–55

Pope C, Mays N (1995ii) Qualitative Research: Reaching the parts other methods cannot reach: an introduction to qualitative methods in health and health services research. *Br Med J* 311: 42–5 (1 July)

Pope C, Mays N (1995i) Qualitative research: rigour and qualitative research. *Br Med J* 311: 109–12 (8 July)

Ross S, Grant A, Counsell C, Gillespie W, Russell I, Prescott R (1999) Barriers to participation in randomised controlled trials: a systematic review. *J Clin Epidemiol* 52: 1143–56

Ryan L (1995) Going public and watching sick people — the clinic setting as a factor in the experiences of gay men participating in AIDS clinical trials. *AIDS Care* 7: 147–58

Salomons TV, Wowk AA, Fanning A, Chan VW, Katz J (2002) Factors associated with refusal to enter a clinical trial: epidural anesthesia is a deterrent to participation. *Can J Anaesth* 49(6): 583–7

Saurbrey N, Jenson J, Elmegaard Rasmussen P, Gjorup T, Guldager H, Riis P (1984) Danish patients' attitudes to scientific-ethical questions. An interview study focusing therapeutic trials. *Acta Med Scand* 215(2): 99–104

Smith P, Arnesen H (1988) Non-respondents in a post-myocardial infarction trial: characteristics and reasons for refusal. *Acta Med Scand* 223(6): 537–42

Snowdon C, Garcia J, Elbourne D (1997) Making sense of randomization: responses of parents of critically ill babies to random allocation of treatment in a clinical trial. *Soc Sci Med* 45: 1337–55

Snowdon C, Garcia J, Elbourne D (1998) Reactions of participants to the results of a randomised controlled trial: exploratory study. *Br Med J* 317: 21–6

Snowdon C, Elbourne D, Garcia J (1999) Zelen randomization: attitudes of parents participating in a neonatal clinical trial. *Controlled Clinical Trials* 20(2): 149–71

Snowdon C, Elbourne D, Garcia J (unpublished) Preliminary report of the study of parental and professional views of ECMO and hypothermia at Glenfield Hospital

Snowdon C, Elbourne D, Garcia J (in press) Perinatal pathology in the context of a clinical trial — attitudes of bereaved parents. *Arch Dis Child*

Sugarman J, McCrory DC, Powell D, Krasny A, Adams B, Ball E, Cassell C (1999) Empirical research on informed consent. An annotated bibliography. *Hastings Centre Report* 29(1): S1–42

Tait AR, Voepel-Lewis T, Siewert M, Malviya S (1998) Factors that influence parents' decisions to consent to their child's participation in clinical anesthesia research. *Anesth Analg* 86(1): 50–3

Tashakkori A, Teddle C (1998) *Mixed methdology: Combining qualitative and quanitative approaches*. Sage, London

Taylor KM, Margolese RG and Soskolne CL (1984) Physicians' reasons for not entering eligible patients in a randomized clinical trial of surgery for breast cancer. *N Engl J Med* 310: 1363–67

Taylor KM, Feldstein ML, Skeel RT, Pandya KJ, Ng P, Carbone PP (1994) Fundamental dilemmas of the randomized clinical trial process: results of a survey of the 1,737 Eastern Cooperative Oncology Group investigators. *J Clin Oncol* 12: 1796–1805

Tognoni G, Alli C, Avanzini F, Bettelli G, Colombo F, Corso R *et al* (1991) Randomised clinical trials in general practice: lessons from a failure. *Br Med J* 303: 969–971

UK Collaborative ECMO Trial Group (1996) UK collaborative randomised trial of neonatal extracorporeal membrane oxygenation. *The Lancet* 348: 75-82 (July 13th)

van Bergen PF, Jonker JJ, Molhoek GP, van der Burgh PH, van Domburg RT, Deckers JW, Hofman A (1995) Characteristics and prognosis of non-participants of a multi-centre trial of long-term anticoagulant treatment after myocardial infarction. *Int J Cardiol* 49(2): 135–41

van Stuijvenberg M, Suur MH, de Vos S, Tjiang GCH, Steyerberg EW, Derksen-Lubsen G *et al* (1998) Informed consent, parental awareness, and reasons for participating in a randomised controlled study. *Arch Dis Child* 79(2): 120–5

Walterspiel JN (1990) Informed consent: influence on patient selection among critically ill premature infants. *Pediatrics* 85: 119–21

Williams RM, Thorn MH, Studd JWW (1980) A study of the benefits and acceptability of ambulation in spontaneous labour. *Br J Obstet Gynaecol* 87: 122–26

CLINICAL TRIALS ETHICS

Clinical Trials 2004; 1: 170–178

Equipoise: a case study of the views of clinicians involved in two neonatal trials

Jo Garcia[a], Diana Elbourne[a] and Claire Snowdon[a,b]

Background It is considered to be a fundamental ethical premise of human experimentation, that it should be carried out only where the effects of an intervention are unclear. The point at which it is considered that there is insufficient scientific and medical evidence to clearly state the superiority of an intervention has been termed equipoise. This concept has been the subject of much recent impassioned debate but little empirical research about the views of people involved in recruitment to randomized controlled trials (RCTs), and none in the particularly emotive area of neonatal intensive care.
Methods Thirty neonatologists recruiting into one or both of two neonatal RCTs in five centres in England were interviewed using a semi-structured schedule to explore their involvement in randomised trials. The interviews were tape-recorded and transcribed. Equipoise was one among a range of topics covered. Concepts relating to equipoise were identified by close reading of the entire interviews. Themes emerging from the data were noted in their contexts then discussed between the co-authors. Interviewees also completed a brief questionnaire about their demographic background, and their experience of research and RCTs.
Results Almost all the neonatologists used the concept of equipoise [using words and phrases such as uncertainty, lack of knowledge (or ignorance), strengths of views, and balancing of pros and cons] in their interview and, for most of them, equipoise seemed to be a useful term. They explored ideas about equipoise at the individual and community levels, and some linked equipoise with notions of the responsibility that should be exercised by the scientific and professional communities. They differed in the importance they gave to individual equipoise, and in how they reacted to threats to equipoise. Feelings of doubt about a trial and disturbed equipoise were more often expressed by more junior doctors.
Conclusions Our findings suggest that the concept of equipoise goes beyond the idea of uncertainty. In part this is because it includes the balancing of benefit and harm; this balancing is part of a professional obligation and requires engagement with 'expert' knowledge. Equipoise could therefore be seen as 'active' or 'responsible' uncertainty. Elucidation of this difficult concept may help to facilitate recruitment for both clinicians and parents in future trials and thereby help to find answers to important clinical questions. *Clinical Trials* 2004; 1: 170–178. www.SCTjournal.com

Introduction

Randomized controlled trials (RCTs) are important for answering questions about the effectiveness of aspects of health care. Nevertheless, RCTs are often considered problematic both conceptually and practically. A major problematic area is the whole ethical basis underpinning randomization – ideas of uncertainty and equipoise.

A fundamental ethical premise of human experimentation is that experimentation should be carried out only when the effects of an intervention

[a]Medical Statistics Unit, London School of Hygiene and Tropical Medicine, University of London, London, UK, [b]Centre For Family Research, University of Cambridge, Cambridge, UK
Author for correspondence: Jo Garcia, Medical Statistics Unit, London School of Hygiene and Tropical Medicine, Keppel Street, London WC1E 7HT, UK. E-mail: j.garcia@ioe.ac.uk

© Society for Clinical Trials 2004

10.1191/1740774504cn020xx

are unclear. The point at which it is considered that there is insufficient scientific evidence to clearly state the superiority of an intervention, has been termed equipoise [1,2]. The aim of a trial is to shift the balance of evidence in one direction or the other.

A frequently discussed issue is that of individual versus collective equipoise. Whilst a trial may be initiated after collaborators agree that equipoise exists, individuals may carry personal convictions as to the best treatment, based upon clinical experience, a hunch or existing data [3]. If a physician feels that a particular treatment would be beneficial to a patient, whatever the basis, they are not personally in a state of equipoise. According to the Hippocratic Oath a physician must do no harm. Zajicek [4] states that offering the possibility of a treatment the physician feels is inferior breaches that oath. Bradford Hill [5] argued that whatever the implications for a trial, the physician with a treatment preference is obliged to give that treatment. In contrast, Freedman [6] suggests that focussing on personal beliefs is inappropriate and the concept of individual equipoise is faulty. He states that "clinical equipoise", that is, the collective uncertainty of the medical community, is more relevant. Under this concept, a clinician with a preference may recruit patients to a trial of a treatment about which there is no consensus in the medical community without violating an ethical principle.

The concept of collective rather than individual equipoise has had a mixed reception. Hellman and Hellman [7] do not accept that the general view of the medical profession is relevant, arguing that each patient has a right to their physician's opinion. In an argument which includes preferences alongside the issues of beliefs about safety and efficacy, Appelbaum *et al.* [8] suggest that it is unlikely that a clinician would have no suspicion as to which of several treatments may suit the physical or emotional needs of a particular patient. Similarly Kodish *et al.* [9] argue that physicians are trained to rely on rather than suspend their professional judgement. They focus on the individual doctor–patient exchange, taking the preferences of each party into account, stating that RCT recruitment is only ethical if a physician "cannot judge which arm of a protocol is preferable for a particular patient" and randomization should not be used "when patient preferences for one treatment or another can be elicited". Although the issue of patient equipoise is rarely addressed [10], public perceptions of the efficacy of an intervention can exert a powerful influence on trial recruitment. For example, when media reports convinced patients of the superiority of laparoscopic removal of the gallbladder, two trials [11,12] were hampered by poor recruitment [13].

Defining when equipoise exists raises further difficulties. Starzl [14] and Berry [15] voiced concerns that specific trials were carried out when there was already sufficient evidence from earlier research to indicate the superiority of a treatment. They disagreed that equipoise existed and felt it was indefensible to withhold the experimental treatment from the control groups of patients.

Equipoise can also change in the course of a trial due to the growth of knowledge over time [3]. As more patients are randomized, data accumulate and physicians grow in experience. If the treatment allocation is not concealed, they may see treatment succeed or fail in one arm of a trial [16]. One difficulty lies in the issue of access to interim data. It is generally agreed that trials should continue until there are sufficient data to answer the research question posed. Before a statistically significant difference between groups can be observed, a trend may emerge in one direction. Lantos [17] argues that this raises particular difficulties and that physicians should have access to interim data in order to make better choices for their patients. Interim data can, however, be misleading and hence are usually released only to an independent data monitoring committee [18]. Whilst this provides clear boundaries around the data, it does not address the individual difficulties which may be experienced by clinicians whose equipoise is disturbed during a trial [7].

Authors also differ in whether they see "equipoise" and "uncertainty" as being interchangeable terms [19]. These concepts have been central to discussions about the feasibility of, ethical basis of, and necessity for, RCTs. They have been the subject of much recent debate [10,20–25], as correspondents try to pin down the precise meanings of these subjective and inconstant concepts. Discussions revolve around exactly what uncertainty and equipoise are, who is uncertain or in equipoise and under what conditions are these states maintained. Clearly these issues raise an inherent difficulty in RCTs; equipoise and uncertainty provide the ethical foundations for a trial, but are also shifting concepts and a source of dispute.

If we are to be able use RCTs to answer important health care questions, we need to explore these concepts from the perceptions of the people directly involved – especially patients and their families, and professional caregivers involved in RCTs. Previous empirical work on the views of health professionals in oncology, ophthalmology and general practice about clinical uncertainty and equipoise has been very limited [26–30], but suggests that one barrier to recruitment to RCTs is discomfort with having to admit to uncertainty.

The circumstances in which equipoise or uncertainty are discussed are likely to affect the

attitudes of clinicians. Where patients are vulnerable, for instance, having received the news of a life threatening illness, the news that the most appropriate form of treatment is not known can be particularly difficult to give [27,31,32]. No empirical studies have been conducted in the particularly emotive area of neonatal intensive care. This setting may raise further difficulties as consent needs to be requested, often in times of great stress, from one vulnerable person (a parent) for another (a child). We have previously conducted qualitative studies [33–36] in the neonatal field which considered randomization from the perspective of parents of babies in the UK ECMO trial [37]. The present paper extends this work by focusing on equipoise and uncertainty in the context of randomization from the perspective of neonatologists who had been recruited to this interview study because of their involvement in two neonatal RCTs (INNOVO and CANDA – see below). They had been interviewed as part of a larger study of parents and clinicians about RCTs in the perinatal period.

Methods

The clinicians whose views are reported in this study had been involved in one or both of two neonatal trials. The INNOVO Trial (www.innovo-trial.org.uk) compared giving inhaled nitric oxide via a ventilator versus standard ventilator care to babies in two gestational age groups: term or near term, and preterm. The CANDA Trial [38] compared two surfactants for preterm babies. Research Ethics Committee (REC) approval for the study reported here was given by the North Thames multicentre REC and by appropriate local RECs to work in five centres in England. One centre recruited to the INNOVO Trial only, one to the CANDA Trial only and three recruited to both trials. The interviews with neonatologists were part of a wider study that also included the views of parents. Clinicians were identified over the course of the study and interviews arranged at times convenient to them and to fit in with the rest of the work.

We aimed to interview 30 doctors who had recruited at least one baby to the INNOVO or CANDA Trials. In order to achieve this sample, we approached 31 doctors, either in person, by letter or by e-mail. Only one declined to be interviewed. Interviews took place between February 1999 and November 2001. All interviews were carried out by one of the authors (CS) usually at the doctor's place of work, either in their own office or in a private room. One took place in a communal room at the suggestion of the doctor, and one was a telephone interview to the doctor's own home. The interviews were tape recorded and fully transcribed and usually took around an hour. They were semi-structured with a high degree of flexibility as areas of interest to participants and particularly interesting lines of thought were explored. A topic guide was used to make sure that key issues were covered.

The interview explored the views and experiences of the doctors about their involvement in randomized controlled trials in general and INNOVO and CANDA in particular. They were asked about their clinical and research roles, about training for research and support from senior staff (if applicable), and about communication with parents and colleagues. A number of specific topics were also raised in the course of the interview including, for instance, post-mortems in the context of an RCT [39–41]. The topic of equipoise was only one of many issues discussed. In the interview the term "equipoise" was introduced with a question in which it was used without an explanation, for instance: "Do you talk [to parents, when explaining a trial] about the idea of equipoise?" Most interviews proceeded like this but in a few cases the question was not put in this way if, for instance, the topic was raised spontaneously by the neonatologist earlier in the interview, or the person's limited level of knowledge was clearly such that it was not appropriate to ask it like this. If the interviewer was asked for clarification about the word by a respondent who did not recognize it, a typical explanation was that equipoise is when "the information about the treatments is equally balanced, so that it's not possible to say one way or another which treatment would be the best".

Demographic data were collected by a brief questionnaire left with the doctor after the interview. The respondent's experience of RCTs was assessed from the information given in the interview. The analysis for this paper was done by one author (JG) with input from the coauthors in clarifying themes and subthemes. The aim was not, at first, to focus on equipoise but to look at the interviews as a whole to see what themes emerged. However JG, on reading all the transcripts, found that equipoise emerged as an important issue. The next step was to go back and identify key ideas that were judged to be about equipoise and to find all relevant examples from the transcripts. Although no qualitative analysis package was used, all the transcripts were examined in detail and themes and sub-themes emerging from the data were noted in their contexts. At this stage ideas were shared with the other authors who also read the transcripts and commented on these themes. In addition, data from the interviews were tabulated by hand by JG in order to describe some of the key characteristics of the interviewees including their research background, experience of RCTs, views about training and

education and use of the word equipoise in the interview.

Results

The average age of the 30 participating neonatologists was 36 years (range 27–54), 25 were hospital employees and five employed by a university, and 25 were male. They varied in their level of clinical experience and current responsibility. Eleven were consultants with many years of experience. All the interviewees had been approached because they were recorded as having recruited to either INNOVO or CANDA but they had not all had the same level of involvement in randomized trials. Thirteen had extensive experience and had been recruiting to trials for many years or had run their own trials. In contrast, two interviewees had very little experience, perhaps having recruited one or two babies to one of the trials. Respondents who had experience with trials other than INNOVO or CANDA drew on that entire range of experience.

Use of the term "equipoise"

Of the thirty interviewees, nine used the word spontaneously before it was mentioned, nine understood it when it was raised, eleven did not know the word and in one interview it does not seem to have been addressed. It was striking that almost all the interviewees, even those who did not recognize the word, discussed the key ideas that make up the notion of equipoise, though they used different language to express it. Three respondents who did not were among those who did not recognize the word when it was raised in the interview; two of them were classified as having had limited experience of RCTs and one as having "some" experience.

Ways of talking about equipoise

We judged that there were four words or phrases which respondents used to reflect the linked ideas that made up their notions of equipoise about the interventions: uncertainty; lack of knowledge (or ignorance); the strengths of their views; and the balancing of pros and cons. These ideas came from sections of the interviews where we had judged that equipoise was being discussed or explained by the respondents even if they did not use the word; they sometimes used more than one of these words or phrases when talking about equipoise, even within the same section of the interview. They discussed equipoise when talking about their own experiences of involvement in RCTs and also when telling us how they explained RCTs to parents. Here are some examples of the ways that equipoise was expressed. First, *uncertainty*:

> ...for a trial to be ethical you have got to have sufficient uncertainty to make the two approaches, or an approach and a placebo, of equal uncertainty.

> ...if we believed that the evidence was strong enough then we wouldn't be asking for consent...we'd be treating [with nitric oxide], but at the moment it's still uncertain.

It was relatively unusual for the word "uncertainty" to be used. More often the respondents used *ignorance* or *lack of knowledge*:

> I mean the reason we're doing trials is because we don't know the answer to the question...

> [in explaining a trial we would say]... we genuinely do not know the best thing to do. This is a situation where we're at the cutting edge of progress and we don't know the best way forward.

One of the most common ways of expressing equipoise in this group of clinicians was to refer to the *strength of a person's view*. Equipoise existed where strong views about the treatments were absent:

> ...like I said I haven't had any strong views about whether it [nitric oxide] worked or not.

> ... so I know that this (involvement in trials) is the right thing to do, however, at the same time I have to be certain in my mind that the treatment that you are going to give the baby is not detrimental. If I'm convinced that it is a detrimental treatment then I think I would rather be out of the trial, and if also I know .... I'm convinced that it is a better treatment, I think that is again a very unfair situation to be submitting parents to randomize.

> ... for example some people thought ECMO was the greatest thing since sliced bread and so they thought what's the point of doing a trial...when you may be denying the baby a potentially life saving procedure. Equally other people felt that ECMO was the worst thing you could ever do to a child, that it was totally inappropriate and they would never recruit to a trial so there's two extremes.

The idea of *balance* was expressed by several respondents:

> ... I don't think we know...there are potential toxicities, very real toxicities associated with it, so there is this balance of...benefit and harm...

> ...when it came to the surfactant question that we were talking about, it was relatively easy to say: "... we think we know that animal derived surfactants work faster than the chemically..." but there's still the problem that that carries, on the animal product side, which presumably is not on the other. So one can illustrate the uncertainties; it doesn't necessarily have to be a global uncertainty,

> this one's better than that one. (...) we know that the risks with this one are this and with that one are that, and we don't know overall which makes the most difference.

This next comment includes two of the ideas – *lack of knowledge* and the *balance* of advantage and disadvantage:

> The next sort of thing I would emphasize is that we don't know which approach is better... And so I'd talk around the pros and cons of both arms and I think it's a bit naïve to just say: "We don't know which is better". I think it is probably better to go into the disadvantages of either...

This respondent was talking about how he would explain the trial to parents. Other words used by respondents to describe how they would convey their equipoise to parents included *neutrality, unbiased* and *balanced.*

Different levels of equipoise

Because there has been discussion for some time among clinicians and trialists about the relationship between equipoise at an individual and wider level we looked for this theme in the data, and in some interviews respondents were asked about it explicitly. Some recognized the different levels at which judgements could be made about a trial but expressed the view that they would not be able to take part if not *individually* in equipoise.

> I think if you're having an intellectual contribution to a trial, then I couldn't be involved in that intellectually, unless I was in individual equipoise. So if I was on the XX Trial Steering Committee and I actually believe that XX is the best thing since sliced bread, I couldn't...I couldn't put that on one side for the greater good. I just couldn't be involved in that, so individual equipoise is very important there.

> ...but if I'm in a trial where I've actually got to get consent, I've got to be in a position to actually get that across to the families. And if I can't do that, then I'm actually not much use, I don't think. Because if I'm there...you know, putting my doubts on to them, then I think that's wrong.

In addition to this moral obligation to be in equipoise as an individual, some respondents also said that they would not be able to recruit parents effectively if they had doubts:

> ...certainly the babies that I recruited, when I was recruiting, I had no preferences whether the baby was in or not. I think that probably makes quite a lot of difference because...if it's obvious that you think the medicine's fantastic then I think the parents will pick up on that.

Some of the respondents who were more senior and experienced in RCTs discussed different levels at which equipoise might function.

> ...for example, I might have quite a bit of experience to say that (drug X) works better than (drug Y) or that (drug Y) works better than (drug X)...I also have to appreciate that...the evidence to support that doesn't exist, and therefore even though my personal experience might be one thing, I would need...proof of that, and therefore even though my personal equipoise might be a bit fudged, a bit dodgy, then you'd have to go to the community equipoise. But basically I think it depends on ...the quality of the evidence...generally speaking if the study is worth its, you know, tuppence worth, then the community equipoise and the personal equipoise should be more or less the same.

In considering what might be meant by collective equipoise and how agreement might be obtained, one respondent described how recently published research results had caused the team at his hospital to reassess their collective equipoise and make a decision to exclude certain babies from one of the trials:

> Well, it's sort of a personal data monitoring committee for the unit. That's how we see it. We still need to question whether we are giving the right treatment package, management package, and whether that means randomizing or treating, that's important. So it's been a difficult decision and I know a lot of other people have come to that conclusion a long time ago and have been pointing to us and saying, "We told you so some time ago and you've taken a year and perhaps not randomized some babies in that time". But we felt it was worth waiting for the article and doing our own critical evaluation of how good that study was.

This doctor is referring to two levels of collectivity beyond the individual: the medical unit and the wider clinical and academic community. The doctor then goes on to describe the approach taken at that unit, which is to decide as a group and avoid individual consultants having their own policies and approaches to issues like trials. Another consultant described how a similar arrangement worked:

> ...a study would be unworkable here if all...of us [consultants] did not sign up to it, and for that reason alone we would want complete consensus between ourselves about that. So it could be that in debate someone with an individual preference actually, after the debate, comes into equipoise. I've certainly done that when we've had discussions. I thought I knew what the answer was. When we get into the stuff I find, well, actually no, no, how interesting. Yeah right, I'm game for this now.

Another respondent talks about the level at which responsibility exists for evaluating interventions that are in use.

> ...you know the question that's faced us is that we should have done this study ten years ago or...eight years ago, but...there's a sense of community, you know, medical community culpability, or...reflection rather, and also (...) some of the consultants have reflected very clearly on: "Well, why did we actually stick with (Drug Y) for so long without doing a study". Now that isn't just related to our unit, that's related to Great Britain.

So, particularly for the more experienced respondents, equipoise is linked to an intellectual responsibility both at the individual level and as part of a wider professional and scientific community.

Not being in equipoise

Several of the interviewees described problems with equipoise, including recruiting when feeling doubts about a trial:

> I think recently, because we've started to lose equipoise...I suppose a couple of babies who've been in the control limb...I've felt "Oh, I wish it was the other group." but not usually.

Being, or going out of equipoise is usually expressed in a way that mirrors the main ideas about equipoise described above. So, for example, our respondents describe lack of balance about the effects of two interventions, or a growing strength of feeling in favour of one treatment. This was sometimes the result of new research findings from elsewhere, but more often was because of clinical impressions which seemed to be accumulating on the side of one treatment. In some cases, the trial as a whole was not undermined but the respondent expressed a need to reconsider the inclusion criteria for the trial so as to leave out babies that were felt to be clearly likely to benefit from the intervention.

> I would have thought if it was a term baby, a mature baby, then this is the sort of baby that at the moment we're not absolutely sure we're going to carry on randomizing...because the evidence [about nitric oxide] is getting stronger and stronger.

These feelings of not being in equipoise were uncomfortable for our respondents; they used words like "difficult", "uncomfortable", "struggle". The opposite feeling, comfort, was mentioned by many when they were talking about being in equipoise. Feelings of doubt about a trial and disturbed equipoise were more often expressed by more junior doctors. Senior doctors are nearly always part of the decision to take part in the trial and if something happens to disturb their equipoise (like the publication of relevant findings) they are able to change the unit's approach, or decide to withdraw from a trial. More junior doctors are not usually involved in the decision to join the trial and are less able to shift policy if they feel uncomfortable. Their participation in recruitment is seen by them as an expected part of their job and they may find it difficult to voice their doubts about a study:

> ...obviously when you are in a training regime, obviously you don't want to be upsetting too many people...too many senior people, so the safest thing for me to do is to ask somebody else to do it [randomize to a trial that they have doubts about].

In some cases they may not feel that they know enough about the trial in question:

> ...you get thrown in at the deep end. You go into a job and they say, "OK, you know, we're involved in such and such trials and if you get a patient under this many weeks or with such and such...you need to speak to the parents and get them into the trial 'cos we need the numbers." That's how it always comes across.

Finding out about the details of the trials being done in a neonatal unit may be difficult, mainly because of lack of time. Quite a number of the less experienced doctors described the feelings of time pressure and anxiety that accompanied involvement in trials. They wanted support from senior staff and opportunities to learn about the technical, ethical and human aspects of trials by working with and observing more experienced staff.

Expressing uncertainty when talking to parents

In order to explain a trial to parents of eligible babies, clinicians need to express their uncertainty, or lack of knowledge about the treatments. Some of our respondents said that they were uncomfortable doing this and some thought that parents find it difficult to be presented with uncertainty in this way. Although not the subject of a specific question in the interview schedule, the issue was raised by around a third of the sample. This relatively junior respondent said:

> It's difficult, you know. I think as medical practitioners it's, I think in medical practice we find it difficult to...We have to accept that we don't have all the answers in terms of treatment...and of course I'm sure that comes as a disappointment to the families.

Another, more experienced respondent said:

> ...but when you actually mention this, say, "Well, in fact you know, we don't really know what's the best treatment," it is a delicate moment. I'm not really bothered from how they perceive me, as a

> person, because you know, there's lots of things I don't know in life, but their confidence of how their baby's going to be managed, that's the issue that comes up. Again I think it depends you see, because it depends on the thing you're studying...if you can say to them that as a clinician you feel both of these treatments are the best that's available, then in a sense you're offering them either way the best treatment, and therefore it's not a problem.

Several mentioned that in neonatology they worked against a background of clinical uncertainty that they had to communicate to parents. They recognized that this is difficult for parents, but being honest about that uncertainty was very important if you were to be trusted by parents:

> It's about trust, you know. I will trust someone who was honest and said he didn't know (more) than someone who lied.

Discussion

Chalmers [42] states that "all of our interventions in people's lives are two-edged swords", with potential for benefit counterbalanced by potential for harm. Many argue that given this potential for harm, in a climate of uncertainty over the potential impact of an intervention, RCTs offer the best option for both individuals and society [43–46]. The argument that RCTs are a means of "minimizing harm and maximizing benefit" [44] has been extended to suggest that in such conditions it is unethical *not* to enrol a patient to an appropriate protocol [47].

Our qualitative study of doctors who had recruited to two neonatal trials adds to the previous empirical research about the views of professionals in other specialties. We judged that almost all the neonatologists used the concept of equipoise in their interview. The ways that they talked about it included words and phrases like, *uncertain, strength of view, don't know the answer, balance, pros and cons.* We found that the concept of equipoise that they are using goes beyond the idea of uncertainty (at least as the word is used in common parlance). Equipoise could be seen as "active" or "responsible" uncertainty. In part this is because it includes the balancing of benefit and harm; this balancing is part of a professional obligation and requires engagement with "expert" knowledge. The doctors that we interviewed varied in the extent to which they had absorbed the language of clinical trials and some of the more experienced did use the word equipoise; others did not recognize it when it was mentioned.

There seem to be two main issues arising in the recent debate about equipoise – whether it is a useful term at all and whether it can or should refer to the individual view of the clinician or the view of the wider clinical or scientific community. We would argue that for those clinicians in our study most involved with the design and running of trials, equipoise seemed to be a useful term. They explored with us ideas about equipoise at the individual *and* community levels, using the word equipoise in both contexts. Community equipoise was linked to the responsibility that should be exercised by the scientific and professional communities. They differed in the importance they gave to individual equipoise, and in how they reacted to threats to equipoise.

One reason why it is difficult to discuss ideas about equipoise is that everyday words are being used in the debate in ways that go well beyond their normal meaning. Uncertainty can be as simple as not being sure what jacket to put on in the morning or can be a much more specific term that some would rather use instead of equipoise (e.g., Sackett [22]). One argument for using a word like equipoise is that it does not have an everyday meaning. In previous work [33] we have pointed to the problem that can arise when a word like *trial* has a specific meaning for researchers that may be at odds with the common use of the word. So we would suggest that using the word *equipoise* would also be helpful to the less experienced among our interviewees to crystallize the ideas that they used and to give them the tools to discuss their role as clinicians involved in the challenging business of enrolling patients in trials.

By exploring these issues with people who have actually engaged in the process of recruitment, we were able to consider their practical as well as theoretical experience. From this sample, we are not able to say anything about the views of people who did *not* recruit to the trials. It is possible that their views may be different.

Because of the experiences reported to us by some of the more junior doctors we would stress the importance of new staff not merely being given information about ongoing trials but also the opportunity to discuss them and their own uncertainties with senior staff. New staff may then feel more confident about recruitment and better able to raise concerns about a trial. We would also recommend that medical training should involve consideration of trials including ethical and practical issues about recruitment and consent. There is a growing body of research on communication about RCTs to support such training [48,49].

Reporting the thoughtfulness and comfort or discomfort expressed by the people who are actually involved in the recruitment process can elucidate these difficult concepts and may thereby help ease recruitment for both clinicians and parents. Ideally such qualitative work could form an integral part of the pilot stage of trials [48]. The present findings

could not provide help for INNOVO and CANDA as these trials had already completed recruitment. For future trials, the practical effectiveness of building these insights into, for example, patient information letters and accompanying guidance to recruiting clinicians, may be tested empirically. Those results may help to better recruit both participating physicians and patients, and thereby find answers to important clinical questions for this vulnerable group of patients.

Acknowledgements

The study was funded by the Nuffield Foundation. CS was accommodated by the Centre for Family Research, Cambridge for the duration of the study. Secretarial and technical support was provided by Sally Roberts in Cambridge, and Sarah Thorne in the Medical Statistics Unit in London. JG initially worked on this study while at the National Perinatal Epidemiology Unit, Oxford where she was funded by the Department of Health. Finbar O'Callaghan gave helpful comments on an earlier version of the paper. The co-ordination of the project was made possible with the help of various trial local investigators and heads of department at the centres involved. We thank the doctors who gave generously of their time. We thank two referees for *Clinical Trials* and the Editor, whose comments helped to improve this paper.

References

1. **Fried C.** *Medical experimentation: personal integrity and social policy.* New York: American Elsevier, 1974.
2. **Hellman S.** Randomized clinical trials and the doctor-patient relationship: an ethical dilemma. *Cancer Clin Trials* 1979: 2: 189–93.
3. **Schafer A.** The ethics of the randomized clinical trial. *N Engl J Med* 1982; 307, 719–24.
4. **Zajicek G.** Medical ethics – two codes of ethics in medicine. *Cancer J* 1995; 8: 5. URL – http://www.tribunes.com/tribune/edito/8-5z.htm. Last accessed 6 February 2004.
5. **Bradford Hill A.** Medical ethics and controlled trials. *BMJ* 1963; 2: 1043–49.
6. **Freedman B.** Equipoise and the ethics of clinical research. *New Engl J Med* 1987; 317: 141–45.
7. **Hellman S, Hellman DS.** Of mice but not men: problems of the randomized clinical trial. *New Eng J Med* 1991; 324: 1585–89.
8. **Appelbaum PS, Roth LH, Litz CW, Benson P, Winslade W.** False hopes and best data: consent to research and the therapeutic misconception. *Hastings Centre Report* 1987; 17, 20–24.
9. **Kodish E, Lanton JD and Siegler M.** The ethics of randomization. *CA Cancer J Clin* 1991; 41: 181–86.
10. **Lilford RJ.** Ethics of clinical trials from a Bayesian and decision analytic perspective: whose equipoise is it anyway? *BMJ* 2003; 326: 980–81.
11. **Barkun JS, Barkun AN, Sampalis JS, *et al.*** Randomised controlled trial of laparoscopic versus mini cholecystectomy. *Lancet* 1992; 340: 1116–19 (quoted by Lefering and Neugebager).
12. **Kunz R, Orth K, Vogel J, *et al.*** Laparoscopische Cholezystektomie versus Mini-Lap Cholezystektomy. Ergebnisse einer prospektiven, randomisierten Studie. *Chirug* 1992; 63: 291–95 (quoted by Lefering and Neugebager).
13. **Lefering R and Neugebager E.** Problems of randomized controlled trials (RCT) in surgery. Conference Proceedings – Nonrandomized Comparative Clinical Studies, Heidelberg, 10–11 April, 1997. Retrieved 5 February, 2004 from: http://www.symposion.com/nrccs/lefering.htm.
14. **Starzl TE.** Protecting the patient's interest. *Kidney Int* 1985; 28(Suppl 17): S31–33.
15. **Berry DA.** Ethics and ECMO, *Stat Sci* 1989; 4: 306–16.
16. **Hellman D.** Evidence, belief, and action: the failure of equipoise to resolve the ethical tension in the randomized clinical trial. *J Law Med Ethics* 2002; 30: 375–80.
17. **Lantos J.** Ethics, randomization, and technology assessment. *CANCER Supplement* 1994; 74: 2653–56.
18. **Ellenberg S, Fleming T, DeMets D.** *Data monitoring committees in clinical trials: a practical perspective.* Chichester: John Wiley & Sons Ltd, 2002.
19. **Lilford RJ.** Equipoise is not synonymous with uncertainty *BMJ* 2001; 323: 574.
20. **Chard JA, Lilford RJ.** The use of equipoise in clinical trials. *Soc Sci Med* 1998; 47: 891–98.
21. **Weijer C, Shapiro S, Glass K, Enkin M.** Clinical equipoise and not the uncertainty principle is the moral underpinning of the randomised controlled trial. *BMJ* 2000; 321: 756–58.
22. **Sackett DL.** Equipoise, a term whose time (if it ever came) has surely gone. *CMAJ* 2000; 163: 835–56.
23. **Sackett DL.** Uncertainty about clinical equipoise. There is another exchange on equipoise and uncertainty. *BMJ.* 2001; 322(7289): 795–96.
24. **Miller FG, Brody H.** A critique of clinical equipoise. Therapeutic misconception in the ethics of clinical trials. *Hastings Centre Report* 2003; 33: 19–28.
25. **Mann H, Djulbegovic B, Gold P.** Failure of equipoise to resolve the ethical tension in a randomized clinical trial. *J Law Med Ethics* 2003; 31: 5–6.
26. **Benson AB, Pregler JP, Bean JA, Rademaker AW, Eshler B, Anderson K.** Oncologists' reluctance to accrue patients onto clinical trials: an Illinois Cancer Center study. *J Clin Oncol* 1991; 9: 2067–75.
27. **Taylor KM, Margolese RG and Soskolne CL.** Physicians' reasons for not entering eligible patients in a randomized clinical trial of surgery for breast cancer. *N Engl J Med* 1984; 310: 1363–67.
28. **Lacher MJ.** Physicians and patients as obstacles to a randomized trial. *Clin Res* 1978; 26: 375–79.
29. **Taylor KM.** Integrating conflicting professional roles: physician participation in randomized clinical trials. *Soc Sci Med* 1992; 35: 217–24.
30. **Tognoni G, Alli C, Avanzini F *et al.*** Randomised clinical trials in general practice: lessons from a failure. *BMJ* 1991; 303, 969–71.
31. **Truog RD.** Randomized controlled trial of potentially life-saving therapies: are they ethical. *Coronary Artery Disease* 1993; 4: 835–36.
32. **Dobkin BH.** A testing time: a doctor's thoughts on having his patients participate in double blind study of ticlopidine. *Discover* 1990; 11: 86.
33. **Snowdon C, Garcia J, Elbourne D.** Making sense of randomisation: responses of parents of critically ill babies to random allocation of treatment in a clinical trial. *Soc Sci Med* 1997; 45: 1337–55.

34. **Snowdon C, Elbourne D, Garcia J.** Zelen randomization: attitudes of parents participating in a neonatal clinical trial. *Cont Clin Trials* 1999; 20: 149–71.
35. **Snowdon C, Garcia J, Elbourne D.** Reactions of participants to the results of a randomised controlled trial: exploratory study. *BMJ* 1998; **317**: 21–26.
36. **Snowdon C, Garcia J, Elbourne D.** Decisions, Decisions: How Do Parents View the Decision They Made About a Randomized Clinical Trial? In Fullford KWM, Dickenson DL, Murray T *Healthcare Ethics and Human Values: An Introductory Text with Readings and Case Studies*. Oxford: Blackwell, 2002: 261–69.
37. **UK Collaborative ECMO Trial Group.** UK collaborative randomised trial of neonatal extracorporeal membrane oxygenation. *Lancet* 1996; **348**: 75–82.
38. **Ainsworth SB, Beresford MW, Milligan DWA *et al.*** Pumactant and poractant alfa for treatment of respiratory distress syndrome in neonates born at 25–29 weeks' gestation: a randomised trial. *Lancet* 2000; **355**; 1387–92.
39. **Snowdon C, Elbourne D, Garcia J.** Perinatal pathology in the context of a clinical trial: a review of the literature. *Arch Dis Child* 2004, in press.
40. **Snowdon C, Elbourne D, Garcia J.** Perinatal pathology in the context of a clinical trial: attitudes of neonatologists and pathologists. *Arch Dis Child* 2004, in press.
41. **Snowdon C, Elbourne D, Garcia J.** Perinatal pathology in the context of a clinical trial: attitudes of bereaved parents. *Arch Dis Child* 2004, in press.
42. **Chalmers I.** Scientific enquiry and authoritarianism in perinatal care and education. *Birth* 1983; **10**: 3: 151–66.
43. **Silverman WA.** *Human experimentation: a guided step into the unknown*. Oxford: Oxford University Press, 1987.
44. **Chalmers I.** Minimizing harm and maximising benefit during innovation in health care: controlled or uncontrolled experimentation. *Birth* 1986; **13**: 155–64.
45. **Tobias JS and Souhami RL.** Fully informed consent can be needlessly cruel. *BMJ* 1993; **307**: 1199–120.
46. **Baum M.** Clinical trials – a brave new partnership: a response to Mrs Thornton. *J Med Ethics* 1994; **20**: 23–25.
47. **Segelov E, Tattersall MH, Coates AS.** Redressing the balance: the ethics of not entering an eligible patient on a randomized clinical trial. *Ann Oncol* 1992; **3**: 103–05.
48. **Mills N, Donovan JL, Smith M, Jacoby A, Neal DE, Hamdy FC.** Perceptions of equipoise are crucial to trial participation: a qualitative study of men in the ProtecT study. Control Clin Trials 2003; **24**: 272–82.
49. **Jenkins V, Leach L, Fallowfield L, Nicholls K, Newsham A.** Describing randomisation: patients' and the public's preferences compared with clinicians' preference. *Br J Cancer Res* 2002; **87**: 854–58.

Appendix B – Publication of results of the INNOVO Trial

Field, D., Elbourne, D., Truesdale, A., Grieve, R., Hardy, P., Fenton, A. C., Subhedar, N., Ahluwalia, J., Halliday, H. L., Stocks, J., Tomlin, K. and Normand, C. (2005). Neonatal Ventilation With Inhaled Nitric Oxide Versus Ventilatory Support Without Inhaled Nitric Oxide for Preterm Infants With Severe Respiratory Failure: the INNOVO multicentre randomised controlled trial (ISRCTN 17821339). *Pediatrics* **115**: 926-36.

Neonatal Ventilation With Inhaled Nitric Oxide Versus Ventilatory Support Without Inhaled Nitric Oxide for Preterm Infants With Severe Respiratory Failure: The INNOVO Multicentre Randomised Controlled Trial (ISRCTN 17821339)

D. Field, MD*; D. Elbourne, PhD‡; A. Truesdale, BSc‡; R. Grieve, MSc§; P. Hardy, MSc‡; A. C. Fenton, MD‖; N. Subhedar, MD¶; J. Ahluwalia, MA#; H. L. Halliday, MD**; J. Stocks, PhD‡‡; K. Tomlin, MSc‡; and C. Normand, DPhil§, on behalf of the INNOVO Trial Collaborating Group

ABSTRACT. *Background.* Although inhaled nitric oxide (iNO) may be a promising treatment for newborn infants with severe respiratory failure, the results from 3 previous small trials were inconclusive.

Methods. Infants of <34 weeks' gestation, <28 days old, and with severe respiratory failure requiring ventilatory support were randomized to receive or not receive iNO. The study was not blinded.

Findings. Recruited were 108 infants (55 allocated to receive iNO and 53 not allocated to receive iNO) from 15 neonatal units in the United Kingdom and Republic of Ireland. Fifty-nine percent (64 of 108) died, and 84% of the survivors (37 of 44) had signs of some impairment or disability, 9 (20%) of them classified as severely disabled. There was no evidence of an effect of iNO on the primary outcomes: death or severe disability at 1 year corrected age (relative risk [RR]: 0.99; 95% confidence interval [CI]: 0.76 to 1.29); death or supplemental oxygen on expected date of delivery (RR: 0.84; 95% CI: 0.68 to 1.02); or death or supplemental oxygen at 36 weeks' postmenstrual age (RR: 0.98; 95% CI: 0.87 to 1.12). There was a trend for infants allocated to the iNO group to spend more time on the ventilator (log rank: 3.6), on supplemental oxygen (log rank: 1.4), and in hospital (log rank: 3.5) than those allocated to receive no iNO. This pattern predominantly reflected the infants who died. Mean total costs at 1 year corrected age were significantly higher in the iNO group, partly because of the costs of the gas but mainly because of the difference in initial hospitalization costs.

Interpretation. Evidence of prolongation of intensive care and increased costs of such care, without clear beneficial effects, implies that iNO cannot be recommended for preterm infants with severe hypoxic respiratory failure. *Pediatrics* 2005;115:926–936; *neonatal intensive care, nitric oxide, ventilation, preterm infants.*

ABBREVIATIONS. NO, nitric oxide; iNO, inhaled nitric oxide; INNOVO, Neonatal Ventilation With Inhaled Nitric Oxide Versus Ventilatory Support Without Inhaled Nitric Oxide for Preterm Infants With Severe Respiratory Failure; OI, oxygenation index; Pa_{O_2}, partial pressure of oxygen, arterial; NHS, National Health Service; RR, relative risk; CI, confidence interval; DMC, data-monitoring committee.

When it became clear in the late 1980s that the previously unidentified endothelium-derived relaxing factor was in fact nitric oxide (NO), it offered doctors the opportunity to use, for the first time, a selective pulmonary vasodilator in a variety of patient groups. In relation to the newborn (those with respiratory disease frequently have relatively high pulmonary artery pressure), this agent seemed to offer particular therapeutic opportunities.

In preterm infants, increased use of surfactant and antenatal steroids during the early 1990s altered the pattern of preterm lung disease, with fewer infants developing severe acute respiratory failure. As a result, trials of inhaled NO (iNO) were focused on those preterm infants who continued to have major respiratory problems despite antenatal steroids and surfactant, ie, the sickest and smallest infants. A Cochrane review of iNO studies[1] includes 3 trials,[2–4] the total recruitment of which is 207 preterm infants. Since then, another trial has been reported.[5] The earlier studies were each relatively small and are heterogeneous in terms of their characteristics. These individual trials each reported that iNO produced statistically significant short-term improvements in oxygenation, but none showed a statistically significant impact on any medium- or longer-term outcome measure. However, few longer-term follow-up data exist for infants after treatment with iNO.

The other important change in relation to iNO in

From the *Department of Health Science, Leicester Royal Infirmary, Leicester, United Kingdom; ‡Medical Statistics Unit, London School of Hygiene and Tropical Medicine, London, United Kingdom; §Health Services Research Unit, London School of Hygiene and Tropical Medicine, London, United Kingdom; ‖Royal Victoria Infirmary, Newcastle Upon Tyne, United Kingdom; ¶Liverpool Women's Hospital, Liverpool, United Kingdom; #Rosie Hospital, Cambridge, United Kingdom; **Royal Maternity Hospital, Belfast, Republic of Ireland; and ‡‡Institute of Child Health, London, United Kingdom.

D.F. and D.E. were the co-principal investigators for the trial; D.F., D.E., A.T., A.C.F., N.S., J.A., H.L.H., J.S., and C.N. were on the steering committee, developed the trial protocol, and oversaw the conduct of the trial; D.F., A.C.F., N.S., J.A., and H.L.H. entered infants into the trial; D.E., P.H., and K.T. conducted the main analyses; R.G. and C.N. conducted the economic analyses; and all authors contributed to the drafting of the article and approved the final report.

Accepted for publication Aug 25, 2004.
doi:10.1542/peds.2004-1209

Conflicts of interest: D.F. has been a paid speaker and has received support from British Oxygen and Ino Therapeutics, and N.S. has received educational support from Ino Therapeutics.

Reprint requests to (D.F.) Department of Health Science, Leicester Royal Infirmary, PO Box 65, Leicester LE2 7LX, United Kingdom. E-mail: david.field@uhl-tr.nhs.uk

PEDIATRICS (ISSN 0031-4005). Copyright © 2005 by the American Academy of Pediatrics.

Downloaded from www.pediatrics.org at London School Of Hygiene on April 12, 2005

the last 10 years has been the increase in cost after its designation as a "drug" by the US Food and Drug Administration and the recent granting of a product license by the Medicines and Healthcare Products Regulatory Agency (United Kingdom). The high cost of the intervention means that it is particularly important to assess the relative cost-effectiveness of the agent before recommending its widespread use.

AIM

The aim of the INNOVO (Neonatal Ventilation With Inhaled Nitric Oxide Versus Ventilatory Support Without Inhaled Nitric Oxide for Preterm Infants With Severe Respiratory Failure) trial was to assess the clinical effectiveness and cost-effectiveness of a policy of adding or not adding iNO to the ventilator gases of neonates with severe respiratory failure. Two parallel trials were conducted. This article focuses on the preterm infants (<34 weeks' gestation). The results of the trial of term or near-term infants entered at ≥34 weeks' gestation will be reported elsewhere.

METHODS

Hospitals were eligible to participate if they were accustomed to providing long-term ventilatory support for newborn infants, had facilities for providing iNO, and had research ethics committee approval to participate in the trial. On-site facilities for echocardiography were recommended so that infants with congenital heart disease could be excluded and the presence of pulmonary hypertension confirmed.

Infants of <34 weeks' gestation, aged <28 days, and with severe respiratory failure requiring ventilatory support (and having had surfactant when appropriate) were eligible for trial entry if the responsible clinician was uncertain about whether an infant might benefit from iNO. Infants were excluded if there was at trial entry (1) evidence of an uncorrectable bleeding disorder (defined as a platelet count of <50 000 cells per mm^3 and a Kaolin partial thromboplastin time of >72 seconds or international normalized ratio of >2), (2) cerebral ultrasound evidence of intraparenchymal lesions (Papile grade IV [for full definition, see Appendix 1]), or (3) a contraindication to continuation of all intensive care (such as severe congenital abnormalities or lethal chromosomal anomaly).

If an eligible infant met the entry criteria, and the parent(s) consented to the infant's participation in the trial, a brief trial entry form was completed, and the local neonatologist telephoned the central randomization service to check eligibility and record entry details. To take account of the treatment balance across prognostic factors on an ongoing basis, we used a minimization algorithm with a probabilistic element. The infant was randomized to 1 of 2 policies: "add NO to ventilatory gases" or "ventilatory support without NO." The minimization categories were: center; postnatal age (≤3 and 4–28 days); principal diagnosis at trial entry (acute preterm lung disease [presenting with lung disease immediately after birth and randomized at ≤3 days of age], chronic preterm lung disease [presenting with lung disease immediately after birth and randomized for continuing problems after 3 days of age], and "other" [in general, these were infants who developed lung disease after recovering from an initial respiratory problem]); and respiratory disease severity at trial entry based on oxygenation indices (OI) of <30 and ≥30; the OI was calculated from the formula OI = (mean airway pressure in cm H_2O × fraction of inspired oxygen × 100)/postductal partial pressure of oxygen, arterial (Pa_{O_2}) in mm Hg.

During the recruitment phase, the British Oxygen Company (United Kingdom) paid the cost of the supply of NO. The suggested starting dose was 5 ppm, doubling to 10 ppm if no satisfactory response was achieved; if necessary, the dose was doubled again to 20 ppm and then again if required to 40 ppm. A satisfactory response was defined as an increase in postductal Pa_{O_2} of >3 kPa (22.5 mm Hg) after the first 15 minutes of giving iNO. If, at any point after having achieved a satisfactory response, an increase in dose did not produce further improvement in oxygenation, then the dose was decreased to the previous level and maintained there. A nested, randomized study of doses of 5, 10, 20, and 40 ppm did not find evidence of a dose-response relationship (J.A., unpublished data). Subsequently, to ensure the lowest possible effective dose, the concentration was repeatedly reduced by ~10% every 2 to 3 minutes until a decrease (2–3%) in oxygen saturations was noted. iNO then was increased to its previous level (reverse dose-response weaning). Infants not showing a significant acute response were continued on iNO at 5 ppm for 12 hours; if there was still no satisfactory response, then they were weaned off of iNO. Infants randomized to the ventilatory support without iNO group were not to receive iNO at a later stage, ie, there should be no "crossover." From January 1999 to December 2001, online centers were asked to return a quarterly log recording some details of the administration of iNO to infants outside of the trial and giving reasons for treatment or nonrecruitment. All other care was left to the discretion of the responsible clinician. Neonatologists and parents were not blinded to the group assignments, although assessment of outcome was without knowledge of randomized or actual treatment when possible.

Outcome was assessed at 2 points: discharge from neonatal services (or prior death) and 1 year corrected age. The primary outcomes were death or severe disability (see Appendix 1 for definitions) at 1 year corrected age (as a composite outcome and also separately) and death before discharge from hospital or chronic lung disease (being on supplemental oxygen at 36 weeks' postmenstrual age and/or on the expected date of delivery).

Secondary measures of outcome (see Appendix 1 for definitions) also included (at discharge from neonatal services): length of stay in hospital; length of time on supplemental oxygen; length of time on ventilatory support; pneumothorax; other pulmonary air leak; pulmonary hemorrhage; major cerebral abnormality; necrotizing enterocolitis; patent ductus arteriosus needing medical treatment; treatment of retinopathy of prematurity; infection (suspected or confirmed on blood culture); and age at which full oral feeding was established. Secondary outcomes at 1 year corrected age included disability and/or impairment of neuromotor development, vision and hearing, respiratory problems, seizures, growth,[6] and hospital admissions. This information was obtained by the local pediatrician who completed a brief questionnaire when seeing the child in the routine follow-up clinic.

Data about health service usage during the first hospital stay were collected on the specially developed trial data sheets. Information about health and community service usage and costs to parents between discharge home and 1 year corrected age were ascertained from a series of cross-sectional questionnaires sent to parents at home and mailed at 6 monthly intervals. Some parents received only 1 questionnaire between hospital discharge and 1 year corrected age, and none of the parents received >2 questionnaires. Unit costs for hospital services were taken from the National Health Service (NHS) reference costs database[7] and community care costs from work by Netten and Curtis.[8] Total costs were estimated by valuing each resource-use item by the appropriate unit cost and are reported in 2002–2003 prices.

The trial size was calculated based on data obtained during a pilot phase of the trial. It was estimated that to detect whether iNO reduced the primary outcome of death or severe disability at 1 year corrected age from 60% to 40% with an α value of .05 (2-sided) and 80% power would require a total sample size of ~200 preterm infants, which would also allow detection of a reduction in the short-term outcome of death before discharge or chronic lung disease from 75% to 55%.

Analyses were based on the treatment groups as randomly allocated ("intention to treat"). Comparisons of primary outcomes between treatment groups are presented as relative risks (RRs) with 95% confidence intervals (CIs) and χ^2 statistical tests for binary variables, and t tests and median tests for continuous data, as appropriate. Log-rank tests were performed to test comparisons between treatments for time-to-event measures of outcome. The primary outcome measures were stratified for the major prognostic variables: principal diagnosis leading to respiratory distress, postnatal age, and the severity of respiratory disease at trial entry. Homogeneity of RRs between strata was tested (Mantel-Haenzel χ^2). Data were analyzed by using SAS 8.2.[9]

An independent data-monitoring committee (DMC) was established to review confidential interim data and to make recommendations to the trial steering committee. There were no formal

Downloaded from www.pediatrics.org at London School Of Hygiene on April 12, 2005

stopping rules, but the DMC was guided by the Peto-Haybittle rule.[10]

The sponsor of the trial, the Medical Research Council, established a trial steering committee of which they were ex officio members and also had independent membership to oversee the conduct of the trial.

RESULTS

Recruitment began in February 1997 and ended as planned in December 2001. Neonatologists in 34 hospitals in the United Kingdom, Ireland, Belgium, Spain, and Switzerland agreed to contribute. During the pilot phase of the trial, which was intended both to assess feasibility and provide data for the estimate of trial size, 40 preterm infants were recruited. Because there were no major changes to the protocol, data from infants recruited in the pilot phase were subsumed into the main trial (no results were made available to collaborators at that time). The DMC met 3 times in total but did not recommend either early stopping or any additional extension to the recruitment period.

A total of 108 infants was recruited (55 allocated to receive iNO and 53 controls, allocated to not receive iNO) from 15 neonatal units in the United Kingdom and Republic of Ireland (Fig 1). The formal 1-year follow-up assessment was available for all but 1 of the surviving children (in the no-iNO group) who was formally assessed as alive and "normal" at 6 months of age and known to be alive and well at 1 year. (He was seen by a health visitor at this time but did not attend for formal review by the local pediatrician. Sufficient data were available to be sure he did not meet the definition of having severe disability).

Table 1 shows the characteristics of the infants at entry to the trial. The infants were on average 27 completed weeks' gestation at birth and entered with acute preterm lung disease as the main diagnosis, with a median OI of 32. All except 2 infants were known to have received surfactant. The group allocated to receive iNO were, by chance, of higher birth weight and more mature, but otherwise the randomized groups were broadly comparable at trial entry.

Although most infants received the treatment allocated (Table 2), 3 infants in the iNO arm did not receive iNO (because they died before it could be administered), and 4 infants in the no-iNO arm received iNO (2 because of a clinical decision by the local neonatologist; 1 while the infant was, at one stage, in a hospital that was not participating in the trial; and 1 for whom no reason was given). All 4 of these infants died. On average, infants received iNO within 1.2 hours of randomization. In the judgment of the attending clinicians, most of the infants receiv-

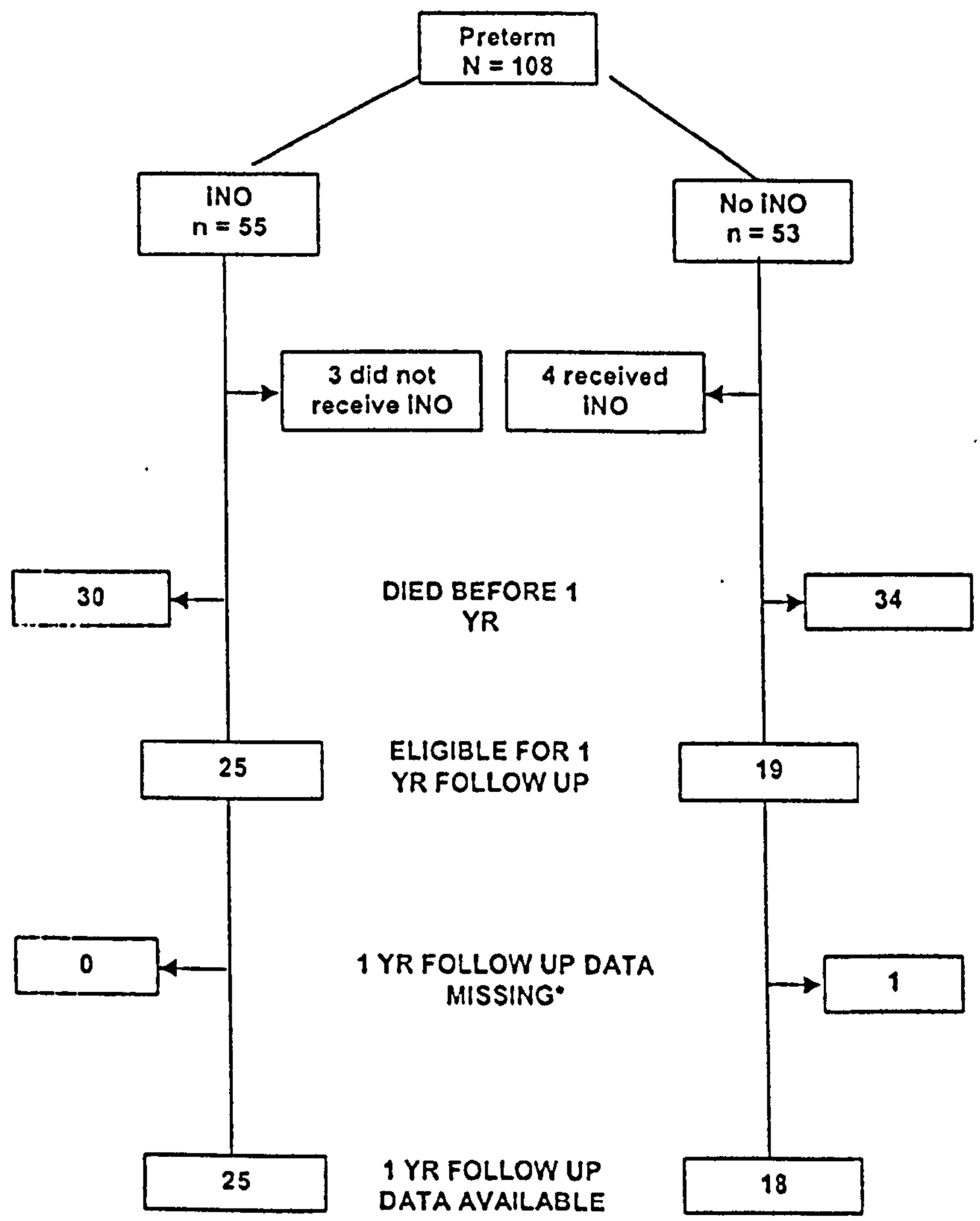

Fig 1. Flow diagram showing the numbers of children involved in the various stages of the study.

Downloaded from www.pediatrics.org at London School Of Hygiene on April 12, 2005

TABLE 1. Description of Infants at Trial Entry

	Allocation	
	iNO (n = 55)	No iNO (n = 53)
Inborn	50	40
Postnatal age, d, median (IQR)	1.0 (0–6.0)	1.0 (1.0–5.0)
Postnatal age ≤3 d	38	37
Gestational age, completed wk, mean (SD)	27.4 (2.6)	26.3 (2.4)
Birth weight, g, mean (SD)	1066 (395)	890 (343)
Male/female ratio	31:24	26:27
Principal diagnosis		
Acute preterm lung disease (≤3 d)	35	36
Chronic preterm lung disease	10	9
Other diagnoses	10	8
Disease severity: OI		
<30	25	25
>30	30	28
Median (IQR)	32.9 (22.2–49.8)	31.9 (17.4–51.8)
Abnormal cranial ultrasound (not sufficient to prevent trial entry)	13	18
Seizures	3	2
Antenatal corticosteroids	44	42
Duration of ventilation, h, median (IQR)	22.0 (9.0–92.0)	24.0 (12.0–132.0)
High-frequency/jet ventilation	33	39
Inotrope use	30	38
Pulmonary vasodilators	6	6
Surfactant	54	52
Number of doses given prior to trial entry		
1	13	10
2	29	28
3	8	12
≥4	4	2

IQR indicates interquartile range.

ing iNO improved within 1 hour, but there was little additional change within 12 hours of commencing iNO. (No judgements could be made about the infants to whom iNO was not administered because no corresponding "event" occurred to mark the start of the assessment period.) Eight treated infants had methemoglobinemia (Table 2). Fewer of the infants in the iNO group were given inotropic support or alternative pulmonary vasodilators, but more of them were treated with muscle relaxants. Otherwise, management after trial entry was similar between the 2 groups (Table 2).

Fifty-nine percent (64 of 108) of the infants died, and 84% of the survivors (37 of 44) had signs of some impairment or disability, 9 (20%) of them classified as severely disabled. There was no evidence of an effect of iNO on any of the prespecified primary outcomes: death or severe disability at 1 year corrected age (RR: 0.99; 95% CI: 0.76 to 1.29; P = .94); death or supplemental oxygen on expected date of delivery (RR: 0.84; 95% CI: 0.68 to 1.02; P = .08); or death or supplemental oxygen at 36 weeks' postmenstrual age (RR: 0.98; 95% CI: 0.87 to 1.12; P = .80) (Table 3). For death, the RR was 0.85 (95% CI: 0.62 to 1.16; P = .30), but the trend toward benefit for iNO with regard to mortality was outweighed by the trend toward increased impairment and/or disability in survivors.

Fifty-seven percent of the 28 survivors classified as showing "signs of impairment or disability at 1 year but not severe" (Table 3) had evidence of abnormal neurodevelopment (10 of 16 in the group allocated to receive iNO and 6 of 12 in the group who were allocated not to receive iNO) and/or significant respiratory problems. Details of the 1-year follow-up for the 44 surviving children are shown in Table 4. These results were obtained from multiple assessors using a standardized format. The children displayed a range of significant abnormalities that, because of their nature, are unlikely to represent false positives. A more detailed respiratory follow-up will be reported elsewhere.

There was a trend for infants allocated to receive iNO to spend more time on the ventilator (log rank: 3.6; P = .06), on supplemental oxygen (log rank: 1.4; P = .24), and in hospital than those allocated to not receive iNO (log rank: 3.5; P = .06), which predominantly reflected the infants who died (P = .05; log-rank test). For survivors, on the contrary, these times tended to be shorter in the iNO group (Table 5).

Resource use and costs are shown in Table 6. National reference costs were used to value the inpatient resource use (note that £1.00 = $1.56 in 2003)[11]; the costs per hospital day were £793 (sensitivity: £946) for level 1 neonatal intensive care, £589 (sensitivity: £600) for level 2 neonatal intensive care, and £347 (sensitivity: £392) for special care. The unit cost for iNO used in this analysis was £33 per hour, which is the average cost per hour now charged to NHS providers for usage up to 96 hours per patient. The price can vary about this average according to the providers' level of use, which was reflected in the sensitivity analysis, in which the price ranged from £31.50 to £35.00 per hour. The sensitivity analysis also tested whether the results were robust to the particular unit costs used for hospitalization.

Of 44 parents, 36 completed at least 1 postal questionnaire. The 8 parents who did not complete a

Downloaded from www.pediatrics.org at London School Of Hygiene on April 12, 2005

TABLE 2. Management Between Trial Entry and Discharge or Death

	Allocation	
	iNO (n = 55)	No iNO (n = 53)
Administration of NO		
iNO administered	52	4
Time from randomization to administration of iNO, h, median (IQR)	1.23 (0.83–2.25)	—
Duration of administration		
<48 h	25	1
>48 h/<3 d	3	1
>3 d	24	2
Response 1 h after establishment of dosage*		
Improved	30	2
Deteriorated	2	0
No clear change	17	2
Other	1†	0
Missing data	2	0
Response 12 h after establishment of dosage*		
Improved	28	1
Deteriorated	7	1
No clear change	13	2
Other	1‡	0
Not applicable: died	1	0
Missing data	2	0
Adverse events potentially related to NO		
Methemoglobin >2%	8	0
NO_2 >2 ppm for >30 min	1	0
Other	6§	0
Other management		
Inotropes	32	41
Paralysis	32	23
Pulmonary vasodilators	5	16
High-frequency/jet ventilation	34	32
Postnatal corticosteroids	22	18
Indomethacin	11	12
Surfactant	16	19
Oral feeding established	28	20
Discharged home on		
Antibiotics	0	0
Steroids	2	1
Anticonvulsants	0	0
Supplemental oxygen	5	5

IQR indicates interquartile range.
* Based on clinical judgement.
† Rise in PaO_2 of <3 kPa but 27% rise from baseline.
‡ NO stopped: coagulopathy.
§ Intraventricular hemorrhage with parenchymal involvement (n = 2); intraventricular hemorrhage with associated platelet aggregation problems; coagulopathy; subcutaneous bleeding; and airway secretions.

questionnaire were assumed to have the mean community costs of the survivors from the treatment or control groups. Because these costs form only a small part of total costs, no sensitivity analysis was conducted. The data presented are from the first questionnaire. These results showed that on average more outpatient and community resources were used in the treatment arm over this 4-week sampling period, but the CIs around the difference are wide, which reflects the small sample size (Table 6). A total of 20 parents also completed a second questionnaire estimating resource use over another sampling period. These results were similar, so the community and outpatient data from the initial sampling period were simply extrapolated to give estimates of resource use (and hence costs) at 1 year corrected age.

Mean total costs per infant at 1 year corrected age were significantly higher in the iNO group, partly because of the costs of the gas but mainly because of the difference in initial hospitalization costs (see Table 6). The costs of subsequent hospitalizations and outpatient and community services were also higher for the iNO arm of the study. The sensitivity analysis showed that these findings were robust to realistic variations in the unit costs.

Other than for the outcome "death or supplemental oxygen on expected date of delivery" and the stratifying factor of postnatal age at entry (for which the P value for the test of homogeneity was .04), the overall effect of iNO on the 3 primary outcomes did not differ when the prespecified stratifying factors of postnatal age, principal diagnosis, and respiratory disease severity at trial entry were taken into account (Table 7).

DISCUSSION

The evidence from this pragmatic multicenter, randomized, controlled trial does not provide support for the hypothesis that the use of iNO improves the outcome for preterm infants with severe respiratory

Downloaded from www.pediatrics.org at London School Of Hygiene on April 12, 2005

TABLE 3. Primary Outcomes

	Allocation	
	iNO (n = 55)	No iNO (n = 53)
Death or severe disability at 1 y corrected age		
Yes	37	36
No	18	16
Missing	0	1*
Death by 1 y corrected age	30†	34
Age at death, d		
≤1	9	7
2–6	3	10
7–27	10	15
≥28	8	2
Cause of death		
Immaturity	14	20
Immaturity and cerebral event	2	6
Immaturity and other event (eg, infection)	6	4
Bronchopulmonary dysplasia	6	3
Congenital anomaly	2	1
Postmortem examination	10	7
Signs of impairment or disability at 1 y corrected age		
Yes, severe	7	2
Yes, but not severe	16	12
None	2	4
Missing	0	1*
Death or supplemental oxygen on expected date of delivery	39	45
Death or supplemental oxygen at 36 wk postmenstrual age	49	48
On supplemental oxygen on expected date of delivery	16	12
On supplemental oxygen at 36 wk postmenstrual age	26	15

* Alive and assessed as "normal" by pediatrician at 6 months.
† One additional infant died after 1 year corrected age.

failure. This finding is not likely to be due to selection bias, because there was well-concealed random allocation that generated broadly comparable groups in the 2 trial arms; if anything, the slight imbalance in gestational age and birth weight would have favored the iNO arm of the study. There was very little loss to follow-up. Nevertheless, a number of caveats must be made. First, both the failure to reach the planned sample size and the 8% crossover to iNO increases the risk of a type 2 error. Second, 30% of infants in the no-iNO group were given other pulmonary vasodilators and, if as effective as iNO, could have further reduced any difference between the groups. Third, despite the broad eligibility criteria, the infants entered into this trial were clearly already suffering from extremely severe lung disease, and hence iNO may have been administered too late to help them; the trial cannot provide evidence about the effect of iNO on infants with less severe respiratory disease. Last, the study was not blinded, giving the opportunity for bias to have been introduced in relation to the management of these children or in the assessment of outcomes. Given the team-based management and disease severity of the infants recruited to this study, we feel that such an effect is extremely unlikely to have occurred.

An economic assessment was incorporated into the initial design of this study. By the end of recruitment, concerns arose about the costs of NO to the NHS.[13,14] Nevertheless, although the trial data indicate significant extra costs associated with its use, these costs seem to be associated with changes in the pattern of survival and increased morbidity (with associated longer hospital stays) rather than simply the costs of the agent itself. A broad approach to costing was taken with costs to a range of agencies included. The results suggest that subsequent hospital and community costs also increase with the use of iNO. The finding that the overall costs were higher with iNO was not sensitive to the unit costs of the gas or the hospitalization. In conjunction with the clinical evidence (no evidence of improvement in outcome), the cost-consequence analysis suggests that iNO is unlikely to offer good value for the money in this population of preterm infants.

It is clearly disappointing that the recruitment targets were not met in this trial. The poorer-than-anticipated recruitment seems to have been the result of several factors. There was a perception by clinicians involved in the study (ie, those in equipoise) that very few infants needed iNO as part of their treatment. Some clinicians were already convinced of the perceived benefits of iNO (largely for infants at or near term) and hence unwilling to join the study. Indeed, based on logs returned from centers participating in the trial, 75 preterm infants who would have been eligible for trial entry received iNO outside the trial. Some clinicians felt that, with such very ill infants, they had to try everything and did not want to omit the use of iNO. Qualitative studies demonstrate the discomfort of some clinicians in their approach to parents of very sick infants,[15] particularly in the present research climate in the United Kingdom, in which a great deal of negative publicity has occurred in recent years in relation to the broad topic of perinatal research. This is particularly problematic in terms of pathology studies,[15] as evidenced by the low postmortem-examination rate (26%) in

Downloaded from www.pediatrics.org at London School Of Hygiene on April 12, 2005

TABLE 4. Status at 1 Year Corrected Age

	iNO (n = 55)	No iNO (n = 53)
Pediatric assessment available	N = 25	N = 18
Missing data	0	1*
Corrected age at assessment		
<48 wk	3	1
48–56 wk	15	9
>56 wk	7	8
Neuromotor		
Head control		
Normal	23	16
Poor	1	1
No or momentary control	1	1
Sitting		
No problem	17	13
Unsupported but insecure	1	3
Cannot be maintained sitting	7	2
Hand use (worst hand)		
Uses pincer grip	19	14
Uses other means	4	4
Unable to pick up	1	0
Missing data	1	0
Difference in function between hands	0	1
On anticonvulsants	3	1
Fit in previous 4 wk	3	0
Vision		
Squint	8	4
Nystagmus	0	0
Vision problems		
Some	4	3
No vision or sees light only	1	0
Hearing		
Hearing loss		
Suspected	5	2
Confirmed	2†	0
Helped by hearing aids	1	0
Feeding		
Oral feeding		
Can manage eating lumps	17	13
Pureed food only	5	4
Pureed food (and via stoma)	2‡	0
Liquids only	0	1
No (via stoma only)	1‡	0
Tube feeds	1	1
Stoma	3	0
Respiratory		
Respiratory support day or night	3	2
Supplemental oxygen	3	1
Respiratory signs and symptoms on examination	9	4
Coughing at night in last 3 mo	8	7
Wheezing day or night in last 3 mo	13	5
Respiratory medication since discharge	10	11
Bronchodilators	10	7
Steroids	5	5
Overall development		
Developmental delay§		
No	16	11
3–6 mo	6	6
>6 mo	3	1
Other impairments	2‖	6¶
Growth		
Standardized height, SD		
Less than −2	8	8
−2 to −1	8	3
−1 to 0	5	3
0 to 1	0	1
1 to 2	2	0
Missing	2	3
Standardized weight SD		
Less than −2	10	9
−2 to −1	9	4
−1 to 0	3	2
0 to 1	2	2
Missing	1	1
Head circumference, mean, SD	45.5 (1.8) (n = 23)	45.2 (1.6) (n = 15)
Admissions to hospital		
One short (≤2 d)	3	6
One longer (>2 d)	1	2
Multiple	10	4

* Alive and assessed as "normal" by pediatrician at 6 months.
† One sensorineural; 1 conductive.
‡ Three children had a stoma, but 2 were also fed orally.
§ Formal developmental assessment (n = 6 [iNO group] and 2 [no-iNO group]).
‖ Transient renal calcification; attends cardiology clinic.
¶ Parents report "black outs"; patent ductus arteriosus (closing); left orchidopexy; hydrocephalus requiring shunt; gastroesophageal reflux/fundoplication/gastrostomy; unilateral ptosis of the right eye.

Downloaded from www.pediatrics.org at London School Of Hygiene on April 12, 2005

TABLE 5. Secondary Outcomes Before Discharge From Hospital

	Allocation	
	iNO (n = 55)	No iNO (n = 53)
Duration of time on ventilator after randomization, d, median (IQR)		
All	7.0 (2.0–26.0) (n = 55)	4.0 (1.0–9.0) (n = 53)
Survivors only	15.0 (6.0–28.0) (n = 25)	12.0 (5.0–36.0) (n = 19)
Deaths only	3.5 (1.0–21.0) (n = 30)	2.0 (1.0–7.0) (n = 34)
Duration of time on supplemental oxygen after randomization, d, median (IQR)		
All	15.0 (2.0–71.0) (n = 50)*	6.0 (1.0–17.0) (n = 49)*
Survivors only	59.0 (30.0–78.0) (n = 20)*	81.0 (14.0–100.0) (n = 15)*
Deaths only	3.5 (1.0–28.0) (n = 30)	2.0 (1.0–7.0) (n = 34)
Duration of time in hospital after randomization, d, median (IQR)		
All	43.0 (2.0–104.0) (n = 55)	7.0 (1.0–86.0) (n = 53)
Survivors only	84.0 (49.0–107.0) (n = 25)	100.0 (57.0–112.0) (n = 19)
Deaths only	3.5 (1.0–28.0) (n = 30)	2.0 (1.0–7.0) (n = 34)
Pneumothorax or other pulmonary air leak	20	20
Pulmonary hemorrhage	4	5
Patent ductus arteriosus needing treatment	9	13
Infection		
Confirmed	23	21
Suspected	12	17
Retinopathy of prematurity	8	4
Not applicable: died before test was done	3	6
Major cerebral abnormality on day-7 and/or 36-wk ultrasound scan (worst side)	6/27†	10/21†
Missing data		
Died before 1 or both scans (and no major abnormality)	22	28
One or both scans not available (and no major abnormality)	6	4

IQR indicates interquartile range.
* Data are missing for 9 infants (5 [iNO group] and 4 [no-iNO group]) discharged home on oxygen.
† Information available from both scans or major abnormality on either scan.

TABLE 6. Resource Use and Costs (per Infant)

	iNO (n = 55), Mean (SD)	No iNO (n = 53), Mean (SD)	Difference, Mean (95% CI)
Resource use (per infant)			
Inpatient resource use up to 1 y corrected age			
NO, h	84.4 (115.7)	7.1 (29.6)	77.3 (44.8 to 109.8)
Days on ventilator	23.1 (41.6)	12.4 (23.5)	10.7 (−2.2 to 23.7)
Days on supplemental oxygen	50.1 (56.3)	32.0 (46.6)	18.1 (−1.7 to 37.8)
Days in hospital (initial)	58.0 (57.6)	37.4 (48.7)	20.6 (0.20 to 41.0)
Days in hospital (subsequent)	3.8 (12.6)	1.6 (4.2)	2.2 (−1.44 to 5.76)
Outpatient and community resource use over the 4-wk sampling period			
Outpatient visits	1.55 (1.87)	1.25 (1.33)	0.30 (−0.81 to 1.41)
General practice surgery visits	2.20 (4.72)	0.81 (0.91)	1.40 (−1.05 to 3.82)
General practice home visits	0.20 (0.41)	0.06 (0.25)	0.14 (−0.10 to 0.37)
Health visitor home visits	1.65 (2.50)	0.50 (0.89)	1.15 (−0.19 to 2.49)
Total costs (£) (per infant) up to 1 y corrected age and sensitivity analysis (£1.00 = $1.56)[11]			
Base case			
NO	1777 (1200)	167 (654)	1610 (1239 to 1980)*
Initial hospitalization†	30 442 (35 389)	18 501 (20 367)	11 941 (184 to 23 699)*
Subsequent hospitalization	1312 (4357)	563 (1444)	749 (−499 to 1997)*
Outpatient	946 (1836)	623 (1232)	322 (−277 to 921)*
GP and community	771 (1463)	420 (123)	351 (−114 to 815)*
Personal costs	58 (154)	117 (546)	−58 (−210 to 94)*
Total costs	35 306 (35 941)	20 391 (26 680)	14 915 (2803 to 27 026)*
Sensitivity			
Low NO cost	35 214 (35 918)	20 382 (26 669)	14 832 (2727 to 26 937)*
Higher ICU costs	40 571 (42 315)	23 478 (30 940)	17 093 (2907 to 31 279)*

* CI was calculated by using the nonparametric bootstrap to allow for the skewed distribution of costs.[12]
† Excluding NO costs.

this trial. Each of these factors relating to recruitment is also important in a wider context.

The pattern of preterm lung disease, presumably after the wider use of antenatal steroids and surfactant, now means that relatively few infants meet the criteria for severe lung disease, and infants not responding to surfactant tend to have more complicated respiratory problems and poorer outcomes.[16,17] Progress in these infants will require trials involving many more units than previously used if recruitment targets, to show small benefits, are to be met. The lack of equipoise about the role of iNO by many

Downloaded from www.pediatrics.org at London School Of Hygiene on April 12, 2005

TABLE 7. Primary Outcomes Stratified by Postnatal Age, Diagnosis, and Disease Severity at Trial Entry

	Random Allocation		Adjusted RR (95% CI)	P Interaction Test
	iNO (n = 55), n (%)	No iNO (n = 53), n (%)		
Death or severe disability				
Postnatal age				
≤3 d	25/38 (66)	24/37 (65)		
>3 d	12/17 (71)	12/16 (75)		
			0.99 (0.76 to 1.28)	.78
Diagnosis				
Acute	23/35 (66)	24/36 (67)		
Chronic	8/10 (80)	7/9 (78)		
Other	6/10 (60)	5/8 (63)		
			0.99 (0.76 to 1.28)	.98
Severity				
OI ≤ 30	16/25 (64)	15/25 (60)		
OI > 30	21/30 (70)	21/28 (75)		
			0.99 (0.76 to 1.28)	.62
Death or supplemental oxygen at expected date of delivery				
Postnatal age				
≤3 d	23/38 (61)	29/37 (78)		
>3 d	16/17 (94)	16/16 (100)		
			0.83 (0.69 to 1.01)	.04
Diagnosis				
Acute	22/35 (63)	29/36 (81)		
Chronic	10/10 (100)	9/9 (100)		
Other	7/10 (70)	7/8 (88)		
			0.83 (0.68 to 1.01)	.92
Severity				
OI ≤ 30	17/25 (68)	20/25 (80)		
OI > 30	22/30 (73)	25/28 (89)		
			0.83 (0.68 to 1.02)	.87
Death or supplemental oxygen at 36 wk postmenstrual age				
Postnatal age				
≤3 d	32/38 (84)	32/37 (86)		
>3 d	17/17 (100)	16/16 (100)		
			0.98 (0.87 to 1.11)	.92
Diagnosis				
Acute	30/35 (86)	32/36 (89)		
Chronic	10/10 (100)	9/9 (100)		
Other	9/10 (90)	7/8 (88)		
			0.98 (0.87 to 1.11)	.94
Severity				
OI ≤ 30	22/25 (88)	22/25 (88)		
OI > 30	27/30 (90)	26/28 (93)		
			0.98 (0.87 to 1.12)	.81

clinicians, despite quite sparse data, is clearly worrying and casts doubt on the extent to which clinical practice has really become evidence based. The results of this study and others might be helpful in making clear that what intuitively might seem the best treatment might not help[18] and might actually make things worse.[19,20]

The clinical data from this study are largely in keeping with those from existing trials, which in general have also shown short-term improvements without any change in the rate of adverse events that might have been predicted to occur from the known biological actions of iNO. A very recently published single-center trial[5] indicated a benefit of iNO on death and chronic lung disease, but the benefit was only in infants with an OI of <6.9.[21]

The data from the INNOVO trial about longer-term outcome is of particular importance. The decision not to use the more formal methods of assessment at 1 year was made initially because there was an expectation that the trial would be much larger, and hence the use of specialized pediatric follow-up would not be feasible and would be prohibitively expensive. By the time it became clear that the trial would be smaller, several infants had already been assessed at 1 year, and it was felt inappropriate to change the methods at that point. The 4-year follow-up (currently underway) does, however, involve specialized pediatricians. Even with these caveats, the lack of any significant beneficial effect on any of the existing longer-term clinical outcomes seems clear. Of the 108 infants recruited in both arms of the study, only 6 were alive and considered normal at 1 year (with a seventh alive and normal at 6 months but lost to the 1-year follow-up). Previous experience[22] suggests that the number of infants displaying handicaps will grow, particularly those with abnormal neurodevelopment at 1 year corrected age. The surviving infants from this study are currently being reviewed at the age of 4 to 5 years.

CONCLUSIONS

The results of our study of preterm infants did not find beneficial effects of iNO; on the contrary, there

Downloaded from www.pediatrics.org at London School Of Hygiene on April 12, 2005

was some evidence of prolongation of intensive care and increased costs of such care, amounting to approximately £15 000 (approximately $23 400) per infant treated. Most of the infants in our preterm group were very ill with severe hypoxic respiratory failure, and it is possible that use of iNO in less-ill preterm infants might have some beneficial effects such as decreasing the risk of chronic lung disease. Trials in the United States and elsewhere are testing this hypothesis. Until the results of these trials become available, iNO cannot be recommended for preterm infants with hypoxic respiratory failure. This view accords with the existing Cochrane review.[1]

MEMBERS OF THE INNOVO TRIAL COLLABORATING GROUP

Steering Committee: J. Ahluwalia, P. Cartlidge, F. Cockburn (Chair: 1997–2000), C. Davies, L. Cordingley, C. D'Arcy, A. Ducker, A. Emmerson, A. C. Fenton, H. L. Halliday, J. Hawdon, A. Howatson, D. Hull (Chair: 2000–2003), A. Johnson, R. Mupanemunda (1997–2000), N. Marlow, D. Macrae, A. Leaf, J. Murphy, N. Subhedar, D. Perrier (1997–2000), G. Russell (1997–2000), D. Shuker, C. Skeoch, J. Stocks, F. Wier, A. Wilkinson, and D. Wilman.

Data Co-ordinating Centre London: K. Diallo, D. Elbourne, P. Hardy, S. Robertson, K. Tomlin, and A. Truesdale.

Clinical Co-ordinating Centre Leicester: D. Field, P. Cornick, and R. Smith.

Recruiting centers (numbers in parentheses denote numbers of infants recruited): J. Staines and A. Hoyle, Ayrshire and Arran Hospital, Irvine, UK (1); A. Ryan and L. Bradfield, Erinville Hospital, Cork, Republic of Ireland (4); A. Khakoo and P. Nambia, Hillingdon Hospital, Middlesex, UK (5); S. Sinha, J. Robins, S. Jollye, and J. Gavey, James Cook University Hospital, Middlesborough, UK (4); S. Bohin, A. Campbell, and K. Ray, Leicester Royal Infirmary, Leicester, UK (19); N. Subhedar, J. McLennan, and B. Shaw, Liverpool Women's Hospital, Liverpool, UK (23); J. Murphy, G. Duffy, and P. Doughty, National Maternity Hospital, Dublin, Republic of Ireland; R. Nicholl and S. Lindsay, Northwick Park Hospital, Harrow, UK (5); J. Ahluwalia, N. Whitehead, L. Scott, and M. Starace, Rosie Hospital, Cambridge, UK (11); J. Moorcraft and G. Collins, Royal Glamorgan Hospital, Llantrisant, UK (3); A. Curley, D. Grier, D. Sweet, and N. Sittlington, Royal Maternity Hospital, Belfast, UK (60); A. C. Fenton, M. Ward Platt, and D. Summers, Royal Victoria Infirmary, Newcastle Upon Tyne, UK (5); P. Midgley and V. Pover, Simpson Maternity Memorial Pavilion, Edinburgh, UK (2); A. Emmerson, A. Chaudhuri, S. Dalton, M. Chiswick, P. Mir, Y. Oluwole, and J. May, St Mary's Hospital, Manchester, UK (17); and J. Hawdon, M. Nugent, and S. Beatson, University College Hospital, London, UK (1).

Data Monitoring Committee: A. Grant, S. Evans, and E. Hey.

Advisory Groups: D. Elbourne, R. Grieve, and C. Normand (economic); D. Elbourne, D. Field, A. Johnson, N. Marlow, and L. Mutch (neurodevelopmental follow-up); C. Beardsmore and J. Stocks (respiratory); C. Wright, S. Gould, A. Howatson, and W. Squier (pathology); A. Goldman, K. Cleaver, D. Macrae, and R. Mupanemunda (technical); and S. Kotecha and D. Shuker (toxicology).

ACKNOWLEDGMENTS

We thank the parents and infants who took part in this study and the Clinical Trial Service Unit for provision of the randomization service.

REFERENCES

1. Barrington KJ, Finer NN. Inhaled nitric oxide for respiratory failure in preterm infants. In: *The Cochrane Library*. Issue 4. Chichester, United Kingdom: John Wiley & Sons; 2003
2. Kinsella JP, Walsh WF, Bose CL, Gerstmann DR, Labella JJ, Sardesai S. Inhaled nitric oxide in premature neonates with severe hypoxaemic respiratory failure: a randomised controlled trial. *Lancet*. 1999;354: 1061–1065
3. Franco-Belgium collaborative NO trial group. Early compared with delayed inhaled nitric oxide in moderately hypoxaemic neonates with respiratory failure: a randomised controlled trial. *Lancet*. 1999;354: 1066–1071
4. Subhedar NV, Ryan SW, Shaw NJ. Open randomised controlled trial of inhaled nitric oxide and early dexamethasone in high risk preterm infants. *Arch Dis Child Fetal Neonatal Ed*. 1997;77:F185–F190
5. Schreiber MD, Gin-Mestan K, Marks J, Huo D, Lee G, Srisuparp P. Inhaled nitric oxide in premature infants with the respiratory distress syndrome. *N Engl J Med*. 2003;349:2099–2107
6. Pan H, Goldstein H. Multi-level models for longitudinal growth norms. *Stat Med*. 1997;16:2665–2678
7. Department of Health. *Reference Costs 2002—National Schedule of Reference Costs*. Leeds, United Kingdom: Department of Health; 2002
8. Netten A, Curtis L. *Unit Costs of Health and Social Care 2002*. Canterbury, United Kingdom: Personal Social Services Research Unit, University of Kent; 2002
9. *SAS System for Windows* [computer program]. Version 8.02. Cary, NC: SAS Institute; 1999
10. Haybittle JL. Repeated assessment of results in clinical trials of cancer treatment. *Br J Radiol*. 1971;44:793–797
11. Organisation for Economic Co-operation and Development. *Main Economic Indicators*. Paris, France: Organisation for Economic Co-operation and Development; 2004
12. Thompson SG, Barber JA. How should cost data in pragmatic trials be analysed? *BMJ*. 2000;320:1197–2000
13. Normand CEM, Field D, Elbourne D, Truesdale A. Nitric oxide is not licensed for preterm neonates. *BMJ*. 2002;325:1244
14. Pierce CM, Peters MJ, Coghen C, Goldman AP, Petros AJ. Cost of nitric oxide is exorbitant. *BMJ*. 2002;325:336
15. Snowdon C, Elbourne DR, Garcia J. Perinatal pathology in the context of a clinical trial: attitudes of neonatologists and pathologists. *Arch Dis Child Fetal Neonatal Ed*. 2004;89:F204–F207
16. Kuint J, Reichman B, Neumann L, Shinwell ES. Prognostic value of the immediate response to surfactant. *Arch Dis Child Fetal Neonatal Ed*. 1994;71:F170–F173
17. Hamvas A, Devine T, Cole FS. Surfactant therapy failure identifies infants at risk for pulmonary mortality. *Am J Dis Child*. 1993;147: 663–681
18. Ballard RA, Ballard PL, Cnaan A, et al. Antenatal thyrotropin-releasing hormone to prevent lung disease in preterm infants. North American Thyrotropin-Releasing Hormone Study Group. *N Engl J Med*. 1998;338: 493–498
19. Ventriculomegaly Trial Group. Randomised trial of early tapping in neonatal posthaemorrhagic ventricular dilatation: results at 30 months. *Arch Dis Child Fetal Neonatal Ed*. 1994;70:F129–F136
20. International PHVD Drug Trial Group. International randomised controlled trial of acetazolamide and furosemide in posthaemorrhagic ventricular dilatation in infancy. *Lancet*. 1998;352:433–440
21. Martin RJ. Nitric oxide for preemies—not so fast. *N Engl J Med*. 2003; 349:2157–2159
22. Wood NS, Marlow N, Costeloe K, Gibson AT, Wilkinson AR. Neurological and developmental disability after extremely preterm birth. EPICure Study Group. *N Engl J Med*. 2000;343:378–384

Downloaded from www.pediatrics.org at London School Of Hygiene on April 12, 2005

APPENDIX 1. Definitions

Disability

Severe disability: no/minimal head control or inability to sit unsupported or no/minimal responses to visual stimuli (equivalent to developmental quotient < 50, which can be used if at correct age)

No signs of impairment or disability: Normal head control; no apparent problem with sitting; uses pincer for right and left hand; is not receiving anticonvulsant medication; no neuromotor problems; no fits in previous 4 wk; no squint; no vision problems; no nystagmus; no hearing loss; no hearing aids; no stoma or tube feeding or parenteral nutrition; can eat lumps; no developmental delay; no respiratory support; no respiratory medication other than antibiotics; and not more than 1 of "respiratory signs/symptoms on examination" or coughing several times most nights for ≥1 wk during previous 3 mo or wheezing during previous 3 mo

Signs of impairment and disability but not classified as severe: by subtraction

Cerebral ultrasound scans

Evidence of intraparenchymal lesions: an echodense area of at least equal echodensity to the choroid plexus or bone, involving the parenchyma of the brain and/or existing parenchymal lesions that were echo-poor, eg, established porencephalic cysts

Major abnormality: H3 or V1 or V2 or P1 or P2; minor abnormality: H2 and V0 and P0; and no abnormality: H0 or H1 and V0 and P0, based on scans at either 7 d or 36 wk gestational age (preterm infants)/28 postnatal d (term infants), where the H, V, and P are based on the following classifications:

H0, no hemorrhage; H1, localized (subependymal/choroidal); H2, any degree confined within ventricular system; H3, parenchymal/periventricular; H4, other; V0, no dilation; V1, dilation requiring nonsurgical intervention; V2, dilation requiring surgical intervention; PO, no cysts; P1, cystic leukomalacia; P2, porencephalic cyst(s); P3, other

Other outcomes

Pneumothorax: confirmed by transillumination, exploratory aspiration, or radiology

Other pulmonary air leak: including pulmonary interstitial emphysema, pneumopericardium, pneumoperitoneum, and pneumomediastinum;

Pulmonary hemorrhage: copious blood-stained secretions with clinical deterioration requiring change(s) in ventilatory management

Necrotizing enterocolitis: evidence of abdominal distension, bilious aspirates, and/or bloody stools, regardless of whether confirmed by radiograph or laparotomy, sufficient to change management

Patent ductus arteriosus: needing medical treatment such as diuretics and indomethacin or surgery but not simply requiring fluid restriction or prophylactic treatment in the absence of symptomatic patent ductus

Treatment of retinopathy of prematurity: grade III or more, as determined by an experienced ophthalmologist on the basis of indirect ophthalmoscopy

FULLERENES

"Fullerenes, better known as buckyballs, have been the darlings of chemists ever since they were discovered 2 decades ago. These novel molecules are, after all, a third major form of carbon, in addition to diamonds and graphite. Shaped like tiny geodesic domes, they also have an undeniable elegance. In recent years, they have emerged as one of the most valuable materials in the rapidly developing field of nanotechnology. But during the last year, preliminary toxicity studies on buckyballs have set off warnings about their potential health hazards.... The worry is that nanoparticles can, among other things, easily penetrate cells, producing unknown effects."

Technol Rev. January 2005

Noted by JFL, MD

Downloaded from www.pediatrics.org at London School Of Hygiene on April 12, 2005

Appendix C – Publication of results of the CANDA Trial

Ainsworth, S. B., Beresford, M. W., Milligan, D. W., Shaw, N. J., Matthews, J. N., Fenton, A. C. and Ward Platt, M. P. (2000). Pumactant and poractant alfa for treatment of respiratory distress syndrome in neonates born at 25-29 weeks' gestation: a randomised trial. *Lancet* **355**: 1387-92.

Articles

Pumactant and poractant alfa for treatment of respiratory distress syndrome in neonates born at 25–29 weeks' gestation: a randomised trial

S B Ainsworth, M W Beresford, D W A Milligan, N J Shaw, J N S Matthews, A C Fenton, M P Ward Platt

Summary

Background Exogenous surfactant preparations vary in their constitution and biophysical properties. Synthetic and animal-derived preparations lower the rate of death compared with controls. No significant differences in mortality or important long-term clinical outcomes have been shown between them in randomised trials. We did a randomised controlled trial to compare pumactant, a synthetic surfactant, with poractant alfa, an animal-derived surfactant, both of which are widely used in the UK.

Methods We enrolled 212 neonates born between 25 weeks' and 29 weeks and 6 days' gestation who were intubated for presumed surfactant deficiency and were free from life-threatening malformations. We randomly assigned 105 neonates poractant alfa, and 107 pumactant. The primary outcome was duration of high-dependency care and mortality was a secondary outcome. Analysis was by intention to treat.

Findings Outcome data were analysed for 199 babies. The trial was stopped on the recommendation of the data and safety monitoring committee because mortality assumed a greater importance than the primary outcome. Predischarge mortality differed significantly between groups, in favour of poractant alfa (14·1 *vs* 31·0%, p=0·006; odds ratio 0·37 [95% CI 0·18–0·76). This difference was sustained after adjustment for centre, gestation, birthweight, sex, plurality, and use of antenatal steroids.

Interpretation Mortality was unexpectedly lower among neonates who received poractant alfa than among those who received pumactant, and was independent of all the variables we investigated. Stopping the trial early may have widened the difference between the treatment groups.

Lancet 2000; 355: 1387–92
See Commentary page ????

Newcastle Neonatal Service, Royal Victoria Infirmary, Newcastle upon Tyne, UK (S B Ainsworth MRCP; D W A Milligan FRCP, A C Fenton MD, M P Ward Platt MD); Neonatal Unit, Liverpool Women's Hospital, Liverpool (M W Beresford MRCP, N J Shaw MD); Department of Statistics, University of Newcastle upon Tyne, Newcastle upon Tyne (Prof J N S Matthews PhD)

Correspondence to: Dr David Milligan, Ward 35 Leazes Wing, Royal Victoria Infirmary, Newcastle upon Tyne NE1 4LP, UK
(e-mail: d.w.a.milligan@ncl.ac.uk)

Introduction

The introduction of surfactant treatment has been associated with significantly improved survival in preterm neonates who have neonatal respiratory distress syndrome.[1,2] The effect of combined antenatal steroids and postnatal surfactant is more effective than with either of these treatments alone.[3]

Surfactants in current use are synthetic or manufactured from animal lung-surfactant extracts (animal-derived or "natural"). Animal-derived surfactants contain a wider variety of phospholipids than do synthetic surfactants, as well as some surfactant-associated proteins. The two types of surfactant significantly reduce morbidity and mortality compared with controls.[1,2] Meta-analyses of randomised controlled trials comparing synthetic and animal-derived surfactants show significantly fewer pulmonary air leaks with animal-derived surfactants.[4,5] One meta-analysis[4] showed a slightly significant difference in mortality, although this review included non peer-reviewed abstracts, the data from which changed in the final published versions. No other significant differences in clinical outcome were noted in these meta-analyses. Studies included involved comparisons of the synthetic surfactant colfosceril palmitate with the bovine-derived surfactants, beractant or calfactant.

Pumactant is a synthetic surfactant and poractant alfa is a porcine-derived surfactant. These two drugs are commonly used in the UK. In-vitro properties of beractant, colfosceril palmitate, poractant alfa, and pumactant differ.[6,7] Extrapolation of findings from clinical comparisons of colfosceril palmitate against bovine surfactants may not, therefore, reflect outcome differences between pumactant and poractant alfa.

In one animal study, pumactant and adult rabbit surfactant lowered the numbers of pneumothoraces in preterm rabbits compared with controls, but neither treatment had much effect on bronchiolar epithelial damage and hyaline membrane formation.[8] Five placebo-controlled trials of pumactant have been reported,[9-11] of which two used a preparation similar to that commercially available.[12,13] No published study has, however, compared pumactant with another surfactant in neonates. The only published randomised clinical study comparing poractant alfa with another surfactant (beractant) showed short-term advantages for neonates treated with poractant alfa but no significant differences in any long-term clinical outcomes.[14]

We designed a randomised controlled trial to compare pumactant with poractant alfa in neonates. The aim of the study was to investigate whether there was a difference in the cost of treatment with these two surfactants.

Methods

We did the study between May, 1998, and December, 1999, in hospitals in the Northern and Yorkshire Health Authority of England, and in Liverpool. To increase the rate of recruitment, two further centres began randomising neonates in October, 1999. We obtained approval for the study from multicentre (Northern and Yorkshire) and local research ethics committees.

Patients

Neonates were eligible for enrolment if they were born between 25 weeks' and 29 weeks and 6 days' gestation, according to best obstetric estimate, and were intubated for presumed surfactant deficiency. We excluded babies who had a congenital malformation likely to affect mortality or respiratory outcome. Neonates were deemed to be surfactant deficient if, in the opinion of the attending clinician, they had clinical signs of respiratory distress and required ventilation.

Study design

We obtained written informed parental consent before neonates were enrolled into the study. Parents were given information sheets and the study was explained to them by medical staff as soon as the possibility of preterm delivery became apparent. We randomised neonates within 2 h before expected delivery or as soon as possible after delivery. Maternal name and unit number, best obstetric estimate of gestational age, and birth order were recorded on a standard form. Randomisation was done centrally by telephone, from a computer-generated sequence concealed in sequentially numbered, sealed, opaque envelopes kept at the neonatal unit in Newcastle upon Tyne, UK. Treatment assignment used random permuted blocks with block lengths randomly set to four or six, stratified by the centre in which neonatal intensive care was provided (we stratified assignment for neonates transferred postnatally for continuing intensive care within the Northern and Yorkshire region by the centre to which they were transferred). Differences in reconstitution and dose calculation of the two surfactants meant that clinicians were aware of treatment assignment.

Timing of the first dose of surfactant after randomisation was decided according to local-unit guidelines. In Liverpool, Middlesbrough, and Sunderland, neonates received the first dose in the delivery room. Elsewhere, the first dose was given after admission to the neonatal unit, although clinicians were encouraged to administer it as soon as possible after birth and within 30 min of intubation. Poractant alfa 100 mg/kg (1·25 mL/kg) or pumactant 100 mg (1·2 mL) were administered

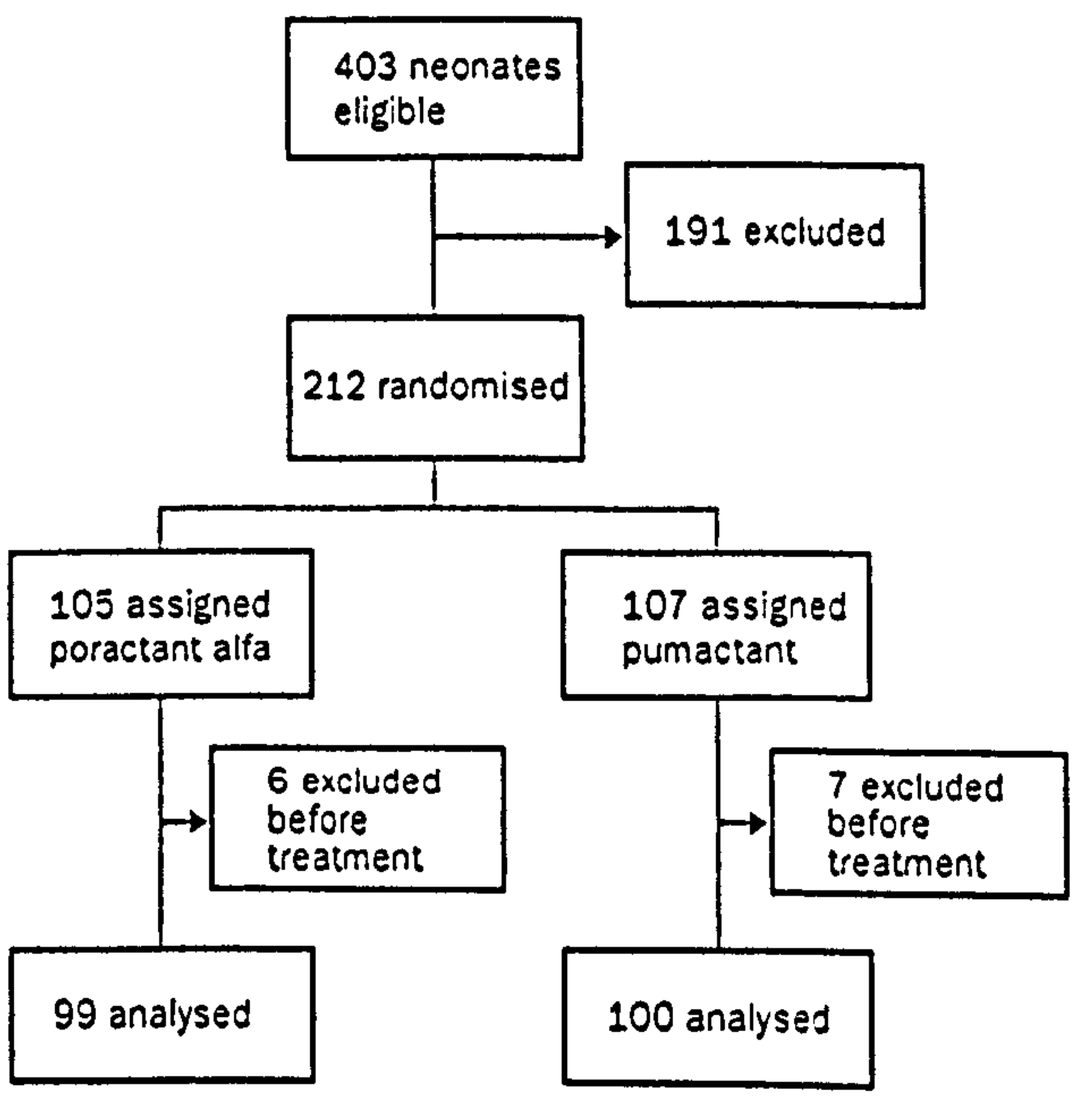

Figure 1: Trial profile

	Poractant alfa (n=99)	Pumactant (n=100)
Birth characteristics		
Median (IQR) gestation (weeks)	28·3 (26·4–29·1)	27·8 (26·3–28·9)
Median (IQR) birthweight (g)	1026 (820–1255)	949 (755–1185)
Mean (SD) birthweight Z scores	−0·57 (1·2)	−0·65 (1·2)
Males/females	64 (65%)/36 (35%)	53 (53%)/47 (47%)
Multiple births		
Number of twins	30 (30%)	21 (21%)
Number of triplets	1 (1%)	2 (2%)
Antenatal steroids		
Any	93 (94%)	93 (93%)
≥2 doses	69 (70%)	78 (78%)
Method of delivery		
Vaginal delivery (including breech)	48 (48%)	50 (50%)
Caesarean section	51 (52%)	50 (50%)

Table 1: Baseline characteristics of analysed neonates

according to the manufacturers' guidelines. The second dose was administered 12 h later to ventilated neonates if the oxygenation index (FiO_2 [%]×mean arterial pressure [cm H_2O]/PaO_2 [mm Hg]) was 5 or more. Further doses of the same surfactant were given at the discretion of the supervising clinician. Rescue treatment for severe respiratory failure with high-frequency oscillatory ventilation and inhaled nitric oxide was used according to local guidelines.

We collected data prospectively for all enrolled babies and collated them on a specifically designed database. Surfactant assignment was recorded at the time of entry to the study and was stored independently of demographic and outcome data. We linked the information only in the final analysis. Disaggregated data necessary for the scoring of days in high-dependency and low-dependency care were collected independently, daily, by nursing and medical staff. We regularly checked accuracy of collected data against existing databases.

The primary outcome was days spent in high-dependency care. We classified high-dependency days as A and B days, according to the Northern and Yorkshire region categories of care[11] (A: respiratory support, including nasal continuous positive airway pressure; B: any neonate not in category A but with an inspired oxygen concentration ≥40%, total fluid requirement administered intravenously in the preceding 24 h, drain in situ, or current weight <1000 g).

The secondary outcome was neonatal mortality, defined as death within 28 days. Two neonatologists in each region, not involved in the organisation of the trial and data analysis, established the cause of death from clinical and necropsy data. Respiratory deaths were those that occurred as a direct consequence of respiratory distress syndrome or chronic lung disease of prematurity. Non-respiratory deaths were those attributed to other causes. Predischarge death was any death that occurred between birth and the time of first discharge home.

Other outcomes were chronic lung disease, defined as dependency on supplemental oxygen at postanal age 28 days and dependency on supplemental oxygen at 36 postmenstrual weeks; pneumothorax, defined as intrathoracic, extrapulmonary air leak that required insertion of a chest drain; findings on cerebral ultrasonography, done at postnatal age 3 days and at 6 weeks (or as near as possible), of haemorrhage (scored as 0 no haemorrhage, I localised subependymal haemorrhage, II intraventricular

	Poractant alfa	Pumactant
Neonatal mortality		
Overall	11/99 (11%)	25/100 (25%)
25 weeks' gestation	4/12 (33%)	6/13 (46%)
26 weeks' gestation	3/17 (18%)	6/22 (27%)
27 weeks' gestation	0	4/17 (24%)
28 weeks' gestation	2/24 (8%)	6/24 (25%)
29 weeks' gestation	2/32 (6%)	3/24 (13%)
Predischarge mortality		
Overall	14/99 (14%)	31/100 (31%)
25 weeks' gestation	4/12 (33%)	8/13 (62%)
26 weeks' gestation	5/17 (29%)	7/22 (32%)
27 weeks' gestation	0	5/17 (29%)
28 weeks' gestation	3/24 (13%)	7/24 (29%)
29 weeks' gestation	2/32 (6%)	4/24 (17%)

Table 2: Neonatal and predischarge mortality

Day of death	Surfacant	M/F	Birthweight (g)	Gestation (weeks)	Cause of death	Primary cause
Early neonatal deaths						
1	Pumactant	F	910	25	Severe RDS and air leak	Respiratory
1	Pumactant	F	690	25	Infection (suspected group B streptococcal infection)	Other
1	Pumactant	F	728	26	Severe RDS, air leak	Respiratory
1	Pumactant	M	880	26	Severe RDS and air leak with PPHN	Respiratory
1	Pumactant	M	910	26	Severe RDS and PPHN	Respiratory
1	Pumactant	M	1126	27	Severe RDS, air leak	Respiratory
1	Pumactant	M	1310	27	RDS with air leak	Respiratory
1	Pumactant	F	930	29	Severe RDS/pulmonary hypoplasia	Respiratory
2	Pumactant	M	917	26	Severe RDS, air leak, air embolus	Respiratory
2	Pumactant	M	1370	28	Severe RDS	Respiratory
2	Pumactant	F	1040	28	RDS/pneumothorax	Respiratory
3	Poractant alfa	M	530	26	Severe RDS, pulmonary haemorrhage	Respiratory
3	Poractant alfa	F	620	26	Intrapartum asphyxia/multiorgan failure	Other
3	Pumactant	M	734	27	Severe RDS, air leak	Respiratory
3	Pumactant	F	825	28	Severe RDS	Respiratory
3	Poractant alfa	M	514	29	Acute renal failure, twin-to-twin transfusion, pulmonary haemorrhage	Other
4	Poractant alfa	M	840	28	Severe RDS	Respiratory
5	Poractant alfa	M	580	25	Severe RDS plus infection	Respiratory
5	Poractant alfa	M	1100	29	Severe RDS with air leak/pneumothorax	Respiratory
7	Poractant alfa	F	585	25	Perforated necrotising enterocolitis	Other
7	Pumactant	M	735	26	Pulmonary haemorrahge secondary to patent ductus arteriosus	Other
7	Pumactant	F	865	29	Hydrops	Other
Late neonatal deaths						
8	Pumactant	M	859	25	Acute renal failure, possible sepsis	Other
8	Pumactant	M	750	25	Severe RDS leading to necrotising enterocolitis	Respiratory
8	Pumactant	M	1378	28	Severe RDS, air leak	Respiratory
8	Pumactant	M	1220	28	Antenatal myocardial ischaemia and hydrops	Other
8	Pumactant	M	1049	29	Pulmonary haemorrhage secondary to patent ductus arteriosus	Other
10	Poractant alfa	M	965	25	Intrapartum asphyxia and multiorgan failure	Other
10	Pumactant	F	690	25	*Staphylococcus* epidermidis septicaemia	Other
10	Pumactant	M	692	28	Severe RDS	Respiratory
10	Pumactant	M	720	28	Air leak/pneumothorax	Respiratory
11	Pumacant	F	762	25	Fungal septicaemia	Other
11	Poractant alfa	M	958	26	Enterobacter/candida septicaemia	Other
11	Pumactant	F	760	26	Necrotising enterocolitis	Other
11	Poractant alfa	M	1220	28	TPN hydrothorax (longline complication)	Other
28	Poractant alfa	M	570	25	Pulmonary haemorrhage secondary to patent ductus arteriosus	Other
Postneonatal deaths						
30	Poractant alfa	M	685	28	Necrotising enterocolitis	Other
59	Poractant alfa	M	765	26	Widespread cerebral ischaemia and periventricular leucomalacia	Other
110	Pumactant	M	550	25	Chronic lung disease	Respiratory
123	Pumactant	F	548	27	Chronic lung disease	Respiratory
133	Pumactant	M	734	29	Chronic lung disease	Respiratory
143	Pumactant	M	600	26	Chronic lung disease	Respiratory
147	Pumactant	M	780	25	Chronic lung disease	Respiratory
217	Pumactant	M	700	28	Hypovolaemia secondary to incarcerated hernia	Other
372	Poractant alfa	M	558	26	Chronic lung disease	Respiratory

RDS=respiratory distress syndrome; PPHN=persisting pulmonary hypertension of the neonate.

Table 3: Cause of death

haemorrhage, III intraventricular haemorrhage with ventricular enlargement, IV parenchymal haemorrhagic lesions),[16] ventricular size, measured by the ventricular index,[17] and parenchymal cysts (scored as 0 no cyst, I porencephalic cyst, II cystic leucomalacia); patent ductus arteriosus, defined as murmur associated with clinical signs of left-to-right shunt requiring medical or surgical closure and confirmed by echocardiography where possible; necrotising enterocolitis, defined according to the clinical staging system proposed by Bell and colleagues;[18] pulmonary haemorrhage, defined as the spontaneous appearance of blood or bloodstained fluid in the endotracheal tube; and retinopathy of prematurity, defined as threshold disease.[19]

Statistical analysis

We calculated the sample size to allow identification of important differences in time spent in high-dependency care. Data for 236 neonates born at 25–29 weeks' gestation in Newcastle upon Tyne and Liverpool showed a median duration of 6 days in high-dependency care. The distribution of these data were well approximated by an exponential distribution and we used this distribution to estimate the sample size. To enable detection of a 25% difference in median time spent in high-dependency care, with 80% power at the 5% significance level, we needed to include 241 neonates in each treatment group. This number was intended to give samples of adequate size of survivors and assumed 20% mortality in each group.

The study protocol stipulated that a data and safety monitoring committee would meet after about half of the neonates had been recruited. We drew up no formal rules for stopping the trial because the decision would depend on outcomes relating to safety and deaths, as well as clinical efficacy.

Analysis was by intention to treat. We compared the death rates in the two treatment groups by odds ratios and 95% CI. We used logistic regression to adjust for potential confounding variables. Treatment centre was fitted as a fixed effect, gestational age in weeks as a categorical variable, and birthweight as a continuous variable. All other potential confounding variables were binary. The models were fitted by use of STATA (version 5.0). We compared secondary outcomes by odds ratios and, since the frequency of some of the outcomes was low, we used the exact method of Thomas,[20] as implemented in StatsDirect (version 1.5).

Results

The data safety and monitoring committee met in December, 1999, 19 months after the trial started. Data on recruitment (207 neonates at Dec 1), exclusions after randomisation (at that time 16 for suspected violations of study protocol), and available outcome data for 189 neonates were presented (data on two were unavailable). The committee, unaware of treatment assignment, noted an unexpected and highly significant difference in

Outcome	Poractant alfa	Pumactant	Odds ratio (95% CI)
Pneumothorax			
Total	11/99 (11%)	22/100 (22%)	0·44 (0·18–1·03)
Survivors	6/85 (7%)	8/69 (12%)	0·58 (0·16–2·03)
Treated patent ductus arteriosus			
Total	20/99 (20%)	10/100 (10%)	2·27 (0·94–5·77)
Survivors	18/85 (21%)	6/69 (9%)	2·82 (0·99–9·19)
Intraventricular haemorrhage any grade*			
Total	42/96 (44%)	37/93 (40%)	1·18 (0·63–2·19)
Survivors	33/83 (40%)	24/66 (36%)	1·09 (0·53–2·24)
Intraventricular haemorrhage grades III and IV*			
Total	7/96 (7%)	7/93 (8%)	0·97 (0·28–3·38)
Survivors	5/83 (6%)	4/66 (6%)	0·99 (0·20–5·23)
Cystic periventricular leucomalacia*			
Total	12/96 (13%)	16/93 (17%)	0·69 (0·28–1·66)
Survivors	9/83 (11%)	15/66 (23%)	0·41 (0·15–1·11)
Necrotising enterocolitis (>Bell stage II)			
Total	4/99 (4%)	3/100 (3%)	1·36 (0·22–9·53)
Survivors	1/85 (1%)	1/69 (1%)	0·81 (0·01–64·5)
Treated retinopathy of prematurity			
Survivors	3/85 (4%)	5/69 (7%)	0·47 (0·07–2·52)
Pulmonary haemorrhage			
Total	9/99 (9%)	5/100 (5%)	1·90 (0·55–7·48)
Survivors	6/85 (7%)	2/69 (3%)	2·54 (0·43–26·4)
Chronic lung disease			
Survivors at 28 days	55/88 (63%)	44/75 (59%)	1·17 (0·60–2·31)
Survivors at 36 weeks	46/86 (53%)	42/75 (56%)	0·90 (0·46–1·76)
Home oxygen	31/85 (36%)	28/69 (41%)	0·82 (0·41–1·66)

*Scanned neonates only.

Table 4: Frequency of secondary outcomes

predischarge mortality that was not explained by differences in gestational age or sex, and recommended that the trial be stopped. The trial coordinators stopped recruitment on Dec 14, 1999, by which time five more babies had been recruited.

From 403 eligible neonates, 212 (198 born in the level III neonatal units and 14 transferred) were included in the trial (figure 1). 191 neonates were excluded before randomisation because of: no ventilation (49), no consent from parents (37), precipitate delivery (28), congenital malformations (three), lack of time for medical staff (30), approach being thought inappropriate (seven), no reason (36), or other reasons (one). 13 babies were excluded after randomisation because of: incorrect estimation of gestation (three), stillbirth (four), withdrawn consent before treatment (one), delivery after 30 weeks (four), or congenital malformation (one). Of the neonates included in the analysis, one assigned poractant alfa received beractant, and one received pumactant. Three neonates in each group were not ventilated after delivery and received no surfactant. Baseline characteristics were similar for analysed neonates (table 1).

Neonatal mortality (odds ratio 0·38 [95% CI 0·17–0·81], p=0·011) and predischarge mortality (0·37 [0·18–0·74], p=0·004) were lower in neonates who received poractant alfa than in those who received pumactant (table 2). The differences remained significant after adjustment for centre, gestational age, birthweight, sex, plurality, and use of antenatal steroids (neonatal mortality 0·32 [0·13–0·77], p=0·011; predischarge mortality 0·27 [0·11–0·64], p=0·003). The difference in mortality between surfactants was consistent across centres.

Five of the 14 predischarge deaths among neonates receiving poractant alfa, compared with 21 of 31 receiving pumactant were attributed to respiratory causes (table 3). Therefore, the proportions of deaths attributed to respiratory causes were 5% (five of 99 neonates) for poractant alfa and 21% (21 of 100) for pumactant (predischarge unadjusted

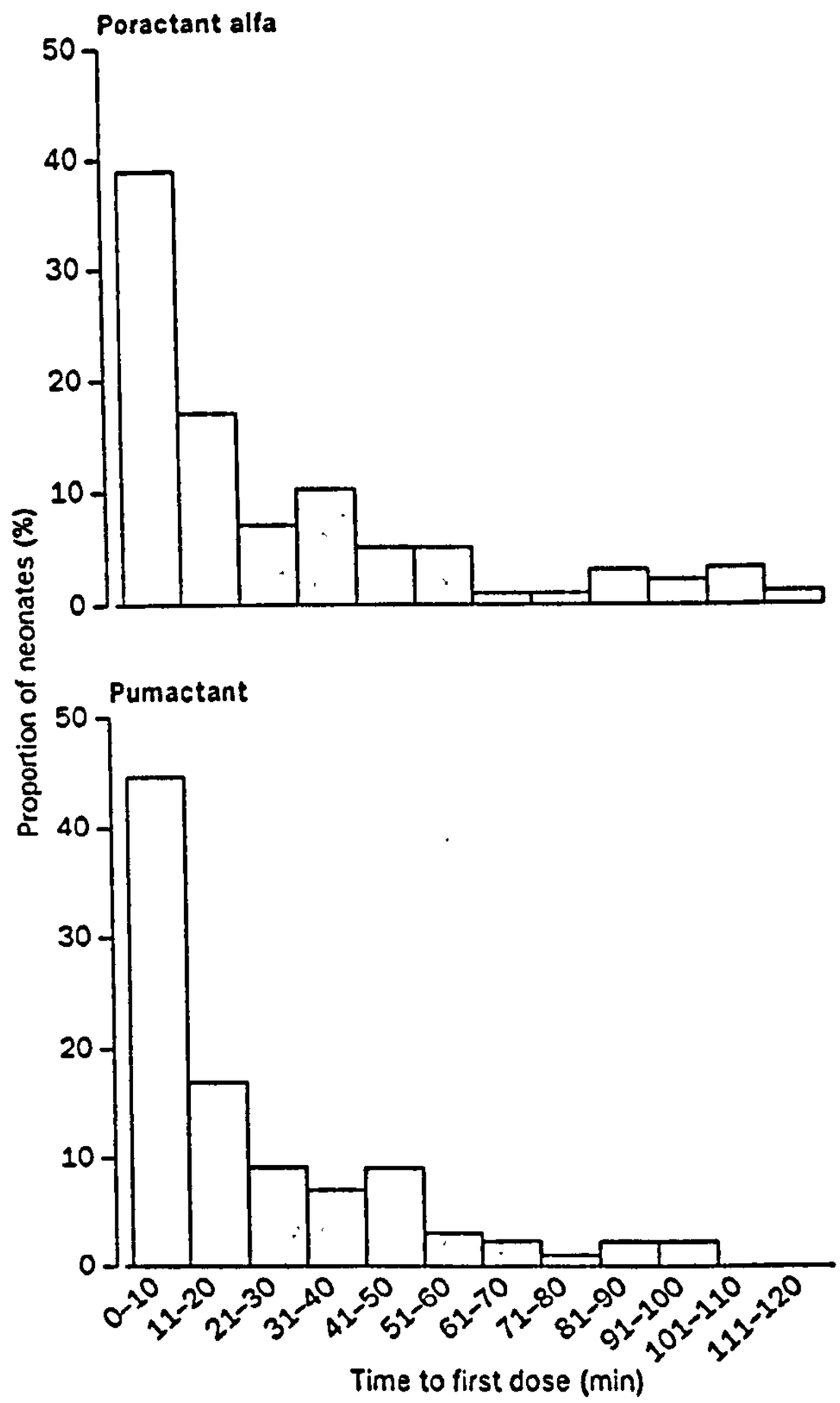

Figure 2: Time to first dose of surfactant
Three neonates were given first dose of pumactant and five were given first dose of poractant alfa after 120 min.

odds ratio 0·20 [0·07–0·56], p=0·001). The difference remained significant after logistic regression (0·13 [0·04–0·44], p=0·001). Around 75% of deaths in the two groups occurred before 28 days; there were more late deaths in the pumactant group. Five of the six late pumactant deaths were attributed to chronic lung disease compared with one of three in the poractant alfa group.

Median duration of high-dependency care among survivors was 22 days (IQR 5–52) in the pumactant group and 18 days (6–39) in the poractant alfa group. The groups did not differ significantly for secondary outcomes (table 4).

Times to first dose of surfactant are shown in figure 2. Timing of the first dose of surfactant (administration before 30 min *vs* administration after this time) did not alter the treatment effect (test for interaction, p=0·64).

Discussion

The decreased neonatal and predischarge mortality (secondary outcomes) in the poractant alfa group was unexpected and led to early stopping of the trial. This finding was not explained by any of the potentially confounding variables we assessed and the difference in mortality is, therefore, probably a treatment effect rather than a chance finding. Stopping the trial early may have widened the difference between groups.

The 13 neonates excluded after randomisation do not bias the analysis, which was done by intention to treat. We excluded neonates with malformations because the presence of the malformation is unequivocal and cannot be affected by the treatment assigned. Gestational age was defined as the best obstetric estimate and was, therefore, independent of the postnatal management.

Lower median gestational age and birthweight in the pumactant group and the higher numbers of male neonates and multiple births in the poractant alfa group might have been expected to increase mortality in the respective treatment groups, but inclusion of these terms in the logistic regression did not alter the magnitude or direction of the difference found. Stratification by centre at randomisation compensated for differences in local guidelines and in policies on rescue treatment.

We considered the possibility of controlling for disease severity and the protocol specified that scores for critical risk index for babies[21] should be collected prospectively. However, this and other published scoring systems[22,23] all use variables that were not available until after entry to the study and could, therefore, have affected the estimate of treatment effect in an unpredictable way. Masking of clinicians to treatment assignment was not possible without alteration of the surfactant properties; pumactant requires reconstitution in cold normal saline, whereas poractant alfa requires warming to body temperature and administration is weight dependent. Most studies included in the meta-analysis of synthetic and animal-derived surfactants did not mask treatment assignment.

Our protocol stipulated that the second surfactant dose be given to ventilated neonates 12 h after the first dose, which is in accordance with the poractant alfa datasheet. The datasheet for pumactant states a second dose may be given at 1 h and a third at 24 h. The second dose is commonly omitted, and there is no published evidence to support or refute its value. The two largest centres in this trial, Liverpool and Newcastle upon Tyne, exclusively used pumactant before this trial. In Liverpool, one dose was given in the delivery suite and a second dose at 12 h; in Newcastle, the first dose was given on admission to the neonatal intensive-care unit and a second dose 24 h later. Predischarge mortality among ventilated babies of 25–29 weeks' gestation in the 2 years before this trial (1996–97) was similar in Liverpool (26·5%) and in Newcastle (25·4%).

Predischarge mortality in the pumactant group of our study (31·3%) was similar to the historical data, but was greater than mortality in the pumactant group of the Ten Centre study (19·0%),[12] and closer to the mortality in the control group of that study (29·7%). Differences in disease severity, changes in patterns of care or demographic variables of babies in studies done more than 10 years apart may explain some of the differences. For example, 10·7% of neonates in the treatment group of the Ten Centre study were not ventilated (and received only a pharyngeal dose of pumactant). Gestation-specific predischarge mortality in the pumactant-treated neonates born at 25–26 weeks' gestation (42·9%) in our study was similar to that in the Ten Centre study (43·2%), but was higher in those born at 27–29 weeks' gestation (24·6 *vs* 9·6%). The differences in mortality between the studies at each gestational week did not reach significance (test for interaction p=0·08).

Most of the early clinical differences in effect between synthetic and animal-derived surfactants are ascribed to surfactant proteins.[24] Surfactant proteins B and C (SP-B and SP-C) are contained in animal-derived surfactant preparations and are especially important in alveolar spreading of surfactant and reduction of surface tension.[25] Addition of SP-B and SP-C to pumactant improves surface-tension-lowering properties in vitro,[7] and lung compliance in preterm rabbits treated with protein-free surfactant was better if the surfactant was supplemented with SP-B, SP-C, or both.[26] Neonates who have a congenital absence of SP-B have no effective surfactant function and die with intractable lung disease.[27] The absence of surfactant proteins in pumactant cannot entirely explain the mortality difference because large trials comparing colfosceril (a synthetic product with no surfactant proteins) with beractant have shown no significant differences in mortality.[28,29]

The pathological processes leading to lung damage begin soon after delivery[30] and may be worsened by factors such as resuscitation manoeuvres, mechanical ventilation, and oxygen therapy.[31] Most protein leakage into the alveolus occurs early in the course of respiratory distress syndrome;[32] administration of exogenous surfactant lowered the rate of leakage in animals.[31,33] Early ("prophylactic") surfactant administration in clinical trials is more effective at reducing mortality and air leaks than administration after lung disease is established.[33] Comparisons of synthetic and animal-derived surfactants have largely used rescue strategies in which surfactant is given to neonates with established respiratory distress syndrome; the only exception to date is one prophylaxis trial of colfosceril compared with calfactant.[34] Early surfactant administration in our trial may have widened the difference between groups in effect on mortality. We saw no beneficial effect in administering surfactant before 30 min compared with later, but we had not designed the trial to show such a difference. Other outcome measures did not differ significantly, but sample size had not been calculated on this basis.

Although stopping this trial early may have increased the difference in mortality between the two groups, we believe that our findings on this secondary outcome have implications for clinical practice. Cost data relating to the primary outcome will be analysed and published separately.

Contributors

Sean Ainsworth was a local coordinator of the trial (Northern and Yorkshire region), and was involved in study design, data collection, analysis, and writing of the paper. Michael Beresford was a local coordinator of the trial (Liverpool), and was involved in study design, data collection, analysis, and writing of the paper. David Milligan helped coordinate the trial and was involved in study design, data collection, analysis, and writing of the paper. Nigel Shaw helped coordinate the trial and was involved in study design, data collection, analysis, and writing of the paper. John Matthews was involved in study design, analysis, and writing of the paper. Alan Fenton was involved in study design and writing of the paper. Martin Ward Platt was involved in study design and writing of the paper.

Acknowledgments

We thank the medical and nursing staff for recruitment of neonates in Liverpool Women's Hospital, Liverpool, UK; Royal Victoria Infirmary, Newcastle upon Tyne; Sunderland Royal Hospital, Sunderland; North Tees General Hospital, Stockton on Tees; South Cleveland Hospital, Middlesbrough; Leicester Royal Infirmary, Leicester; St James' University Hospital, Leeds; Ashington General Hospital, Ashington; Bishop Auckland General Hospital, Bishop Auckland; Dryburn Hospital, Durham; Hartlepool General Hospital, Hartlepool; and West Cumberland Infirmary, Whitehaven. We thank also the staff in other hospitals that allowed us access to the medical records to complete data collection. Additional data from the Ten Centre study was kindly supplied by Colin Morley. Edmund Hey, Ben Stenson, and William Tarnow Mordi commented on earlier drafts of the paper.

The study was funded by Britannia Pharmaceuticals, Serono Laboratories (UK) Ltd, the Community Foundation Tiny Lives Fund, and the Liverpool Newborn Appeal.

References

1 Soll RF. Prophylactic administration of natural surfactant extract (Cochrane Review). In: The Cochrane Library, Issue 2. Oxford: Update Software, 1999..

2 Soll RF. Prophylactic synthetic surfactant in preterm infants (Cochrane Review). In: The Cochrane Library, Issue 2. Oxford: Update Software, 1999.

3 Jobe AH, Mitchell BR, Gunkel JH. Beneficial effects of the combined use of prenatal corticosteroids and postnatal surfactant on preterm infants. *Am J Obstet Gynecol* 1993; 168: 508–13.

4 Halliday HL. Natural vs synthetic surfactants in neonatal respiratory distress syndrome. *Drugs* 1996; 51: 226–37.

5 Soll RF. Natural surfactant extract versus synthetic surfactant for neonatal respiratory distress syndrome (Cochrane Review). In: The Cochrane Library, Issue 2. Oxford: Update Software, 1999.

6 Corcoran JD, Berggren P, Sun B, Halliday HL, Robertson B, Curstedt T. Comparison of surface properties and physiological effects of a synthetic and natural surfactant in preterm rabbits. *Arch Dis Child Fetal Neonatal Ed* 1994; 71: F165–69.

7 Takahashi A, Nemoto T, Fujiwara T. Biophysical properties of protein-free, totally synthetic surfactants, ALEC and Exosurf, in comparison with surfactant TA. *Acta Pediatr Jpn* 1994; 36: 613–18.

8 Morley C, Robertson B Lachman B, Bangham A, Grossman G, Miller N. Artificial surfactant and natural surfactant: comparative study of the effects on premature rabbit lungs. *Arch Dis Child* 1980; 55: 758–65.

9 Morley CJ, Bangham AD, Miller N, Davis AJ. Dry artificial lung surfactant and its effect on very premature babies. *Lancet* 1981; i: 65–68.

10 Milner AD, Vyas H, Hopkin IE. Effects of artificial surfactant on lung function and blood gases in idiopathic respiratory distress syndrome. *Arch Dis Child* 1983; 58: 458–60.

11 Wilkinson A, Jenkins PA, Jeffrey JA. Two controlled trials of artificial surfactant: early effects and later outcome in babies with surfactant deficiency. *Lancet* 1985; ii: 287–91.

12 Ten Centre Study Group. Ten centre trial of artificial surfactant (artificial lung expanding compound) in very premature babies. *BMJ* 1987; 294: 991–96.

13 Morley CJ, Greenough A, Miller NG, et al. Randomized trial of artificial surfactant (ALEC) given at birth to babies from 23 to 34 weeks gestation. *Early Hum Dev* 1988; 17: 41–54.

14 Speer CP, Gefeller O, Groneck P, et al. Randomised clinical trial of two treatment regimens of natural surfactant preparations in neonatal respiratory distress syndrome. *Arch Dis Child Fetal Neonatal Ed* 1995; 72: F8–13.

15 Northern Neonatal Network. Measuring neonatal nursing workload. *Arch Dis Child* 1993; 68: 539–43.

16 Papile LA, Burstein J, Burstein R, Koffler H. Incidence and evolution of subependymal and intraventricular hemorrhage: a study of infants birth weight less than 1500g. *J Pediatr* 1978; 92: 529–34.

17 Levene MI. Measurement of the growth of the lateral ventricles in preterm infants with real-time ultrasound. *Arch Dis Child* 1981; 56: 900–04.

18 Bell MJ, Ternberg JL, Feigin RD, et al. Neonatal enterocolitis: therapeutic decisions based on clinical staging. *Ann Surg* 1978; 187: 1–7.

19 Report of a Joint Working Party. Retinopathy of prematurity: guidelines for screening and treatment. London: Royal College of Ophthalmologists and British Association of Perinatal Medicine, 1995. *Early Hum Dev* 1996; 46: 239–58.

20 Thomas DG. Exact confidence limits for the odds ratio in a two by two table: algorithm AS 36. *Appl Stat* 1971; 20: 105–110.

21 The International Neonatal Network. The CRIB (critical risk index for babies) score: a tool for assessing initial neonatal risk and comparing performance of neonatal intensive care units. *Lancet* 1993; 342: 193–98.

22 Richardson DK, Gray JE, McCormick MC, Workman K, Goldman DA. Score for neonatal acute physiology: a physiologic severity index for neonatal intensive care. *Pediatrics* 1993; 91: 617–23.

23 Maier RF, Rey M, Metze BC, Obladen M. Comparison of mortality risk: a score for very low birth weight infants. *Arch Dis Child Fetal Neonatal Ed* 1997; 76: F146–51.

24 Stenson BJ, Glover RM, Parry GJ, Wilkie RA, Laing IA, Tarnow-Mordi WO. Static respiratory compliance in the newborn. III: early changes after exogenous surfactant treatment. *Arch Dis Child Fetal Neonatal Ed* 1994; 70: F19–24.

25 Creuwels LA, van Golde LM, Haagsman HP. The pulmonary surfactant system: biochemical and clinical aspects. *Lung* 1997; 175: 1–39.

26 Rider ED, Ikegami M, Whitsett JA, Hull W, Absolom D, Jobe AH. Treatment responses to surfactants containing natural surfactant proteins in preterm rabbits. *Am Rev Respir Dis* 1993; 147: 669–76.

27 Nogee LM, deMello DE, Dehner LP, Colten HR. Deficiency of pulmonary surfactant protein B in congenital alveolar proteinosis. *N Engl J Med* 1993; 328: 406–10.

28 Horbar JD, Wright LL, Soll RF, et al. A multicenter randomized trial comparing two surfactants for the treatment of neonatal respiratory distress syndrome. *J Pediatr* 1994; 123: 757–66.

29 Vermont-Oxford Neonatal network. A multicenter, randomized trial comparing synthetic surfactant to modified bovine surfactant in the treatment of neonatal repiratory distress syndrome. *Pediatrics* 1996; 97: 1–6.

30 Seidner SR, Ikegami M, Yamada T, Rider ED, Castro R, Jobe AH. Decreased surfactant dose-response after delayed administration to preterm rabbits. *Am J Respir Crit Care Med* 1995; 152: 113–20.

31 Björklund LJ, Ingimarsson J, Curstedt T, et al. Manual ventilation with a few large breaths at birth compromises the therapeutic effect of subsequent surfactant replacement in immature lambs. *Pediatr Res* 1997; 42: 348–55.

32 Ikegami M, Jobe AH, Tabor BL, Rider ED, Lewis JF. Lung albumin recovery in surfactant-treated preterm ventilated lambs. *Am Rev Respir Dis* 1992; 145: 1005–08.

33 Soll RF, Morley C. Prophyalctic versus selective use of surfactant for preventing morbidity and mortality in preterm infants. (Cochrane review) In: The Cochrane Library, Issue 2. Oxford: Update Software, 1999.

34 Hudak ML, Martin DJ, Egan EA, et al. A multicenter randomized masked comparison trial of synthetic surfactant versus calf lung surfactant extract for the prevention of neonatal respiratory distress syndrome. *Pediatrics* 1997; 100: 39–50.

Appendix D – Multi-centre Research Ethics Committee Approval

North Thames
Multi-centre Research Ethics Committee

Chairman: Dr Hugh Davies Administrator: Mr John Richardso

1 May 1998

Dr Diana Elbourne
Medical Statistics Unit, London School of Hygiene & Tropical Medicine
Keppel Street, London WC1E 7HT

Dear Dr Elbourne

Shewed 62 98

Application reference number MREC/97/2/41 (please quote in all correspondence)
Protocol title A pilot study for a multi-centre randomised controlled trial of ventilatory support with Inhaled Nitric Oxide compared to Ventilatory support without inhaled nitric oxide for neonates with respiratory failure – The INNOVO Trial
Ancillary studies *Pathology*
Toxicology
Respiratory follow-up
Views of participants in trials

I acknowledge receipt of the letter of 30 March 1998 from Ms Claire Snowdon.

Acting under delegated authority, the Chairman of North Thames Multi-centre Research Ethics Committee is satisfied that this response meets the requirements of the Committee following its meeting on 25 February 1998. He has agreed that there is no objection on ethical grounds to the studies whose titles and reference number are given at the head of this letter. I am therefore happy to give you the Committee's approval on the understanding that you will follow the protocol as agreed. The documents approved by the Committee are referenced in the enclosed Response Form, which also contains the Committee's comments.

Conditions of approval

Please read the notes regarding notification of changes and completion of progress reports at the end of the Response Form, as the MREC requires that they be followed.

You will no doubt realise that whilst the MREC has given approval for your project on ethical grounds, it is still necessary for you to obtain management approval from the relevant Clinical Directors and/or Chief Executive of the Trust(s) or Health Authority (ies)/Board(s) in which the work will be done.

Local submissions

It is also your responsibility to ensure that any local researcher seeks the approval of the relevant Local Research Ethics Committee before starting their research. To do this, you should submit the appropriate number of copies of the following to the relevant LRECs:

- this letter
- the MREC application form and supporting documents
- the enclosed response form
- Annexe D of the MREC application form
- one copy of the protocol

Trust Office Central Middlesex Hospital Acton Lane London NW10 7NS
Tel 0181 453 2336 Fax 0181 961 0012

It is important to check with the respective LRECs on the precise numbers of copies required as this will vary and failure to supply sufficient could lead to a delay.

MREC evaluation

During the first year after its establishment, the MREC would like to hear your views and experiences while using the new system. Could you please help us by completing the Principal Researcher Evaluation Form enclosed with this letter and returning it to Jo Duggan, Centre of Medical Law and Ethics, King's College, London, Strand, London WC2R 2LS. Your help is also appreciated in ensuring that local researchers are sent a Local Researcher Evaluation Form also enclosed with this letter. Your views and comments are vital to ensure the process evolves and responds to the needs of multi-centre researchers and we look forward to receiving your comments.

Local sites

While the MREC would like as much information as possible about local sites at the time you apply for approval, it is understood that this is not always possible. You are asked however to send a completed copy of Annexe C for each local site as soon as a researcher has been recruited. This is essential to enable the MREC to monitor the research it approves and for the smooth running of the evaluation.

ICH GCP compliance

North Thames MREC is fully compliant with the International Committee on Harmonisation (ICH) Guidelines for Good Clinical Practice as they relate to the responsibilities, composition, function, operations and records of an Independent Ethics Committee/Independent Review Board. To this end it undertakes to adhere as far as is consistent with its constitution to the relevant clauses of the ICH Harmonised Tripartite Guideline for Good Clinical Practice adopted by the Commission of the European Union on 17 January 1997. The Standing Orders and a Statement of Compliance were included on the disk containing the guidance and application form and are available on request or on the Internet at http://dspace.dial.pipex.com/mrec

Yours sincerely

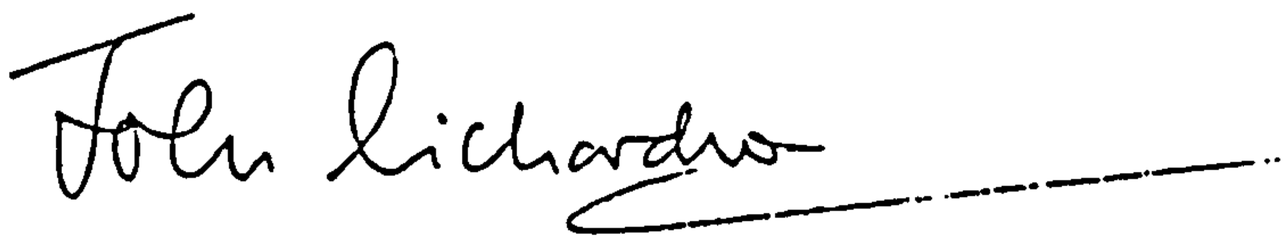

John Richardson
Administrator, North Thames Multi-centre Research Ethics Committee

Appendix E – Correspondence relating to tape-recording discussions between neonatologists and parents

1. Preparatory letter to alert neonatologists to the existence of the research
2. Information sheet for parents
3. Consent form
4. Thank you letter to parents

UNIVERSITY OF CAMBRIDGE

CENTRE FOR FAMILY RESEARCH

Social and Political Sciences Faculty
Free School Lane, Cambridge CB2 3RF

Office: (01223) – 334510
Fax No: (01223) – 330574
E-mail: cfr-admin@lists.cam.ac.uk
Personal Line: (01223) – 33

Director: Professor Martin Richards

Dear Dr .....

Re: Views of participation in neonatal randomized controlled trials - a study of informed consent

I am writing to draw your attention to the above study which is ongoing in the neonatal unit at..... Hospital. The study is funded by the Nuffield Foundation and examines highly topical issues surrounding clinical trials.

We are exploring participation in neonatal trials from the perspectives of each of three key parties; the parents, the medical staff, and the nursing staff. In the light of recent media interest in RCTs it is important that careful research is carried out to clarify the processes involved in neonatal trials and to ascertain the views of all of the parties concerned. The aims of the study are: to describe both the formal and informal processes by which parents are informed about RCTs; to provide information about how trials are perceived and understood by parents who accept or decline trial participation; to highlight possible sources of confusion and to provide a forum for staff to state the impact of trial participation upon their own practice. We hope to highlight areas where staff feel the need for support and information to assist the smooth running of trials and to improve their own and parents' experiences of participation.

The process of recruitment and consent for the INNOVO Trial is of particular interest and we have ethical approval for conversations between doctors and parents to be tape-recorded. Your help in this last element of the research would be appreciated. If you are about to approach parents to offer participation in the INNOVO Trial, we would be grateful if you would consider asking if they would permit a tape recording of your conversation to be made. We do appreciate that this can be difficult and this is addressed in the enclosed study protocol.

We have ethical approval for two approaches to consent, both aimed at interfering with clinical practice as little as possible; you can either give parents a very brief letter asking for their permission to make a recording, followed by a more detailed letter which is given after the conversation, or you can orally give the information to parents at first and then the detailed letter afterwards. The letters are held with the INNOVO Trial details.

The tape recordings provide valuable data which are not only important in their own right, but also give insights to the interview data which are collected subsequently. Clearly there are some instances where it is inappropriate to approach some parents, but any recordings which are possible will make an important contribution to our understanding of consent in this area.

Tape recorders have been provided and are held by Dr ..... and Dr ..... . Details of procedures are in the protocol and summarised on a laminated sheet kept with the INNOVO Trial information. A copy of the protocol is enclosed for your information. I have also included a copy of our most recent publication from our related research with parents of babies recruited to the ECMO Trial.

If you have any queries I can be contacted on 01223 334508 or emailed at cms1000@cam.ac.uk or (nurse) is acting as a contact person for the study. Alternatively you could contact Professor ..... who has made recordings for the study and is very familiar with this research.

Yours sincerely

Claire Snowdon
Research Fellow

enc protocol
publication

UNIVERSITY OF CAMBRIDGE

CENTRE FOR FAMILY RESEARCH

Social and Political Sciences Faculty
Free School Lane, Cambridge CB2 3RF

Office: (01223) – 334510
Fax No: (01223) – 330574
E-mail: cfr-admin@lists.cam.ac.uk
Personal Line: (01223) – 33

Director: Professor Martin Richards

Study of communication in hospital

Doctors in this department are working with researchers at the Universities of London, Cambridge and Oxford to look at the ways that parents and doctors talk to each other about the care of babies in hospital. Your doctor has agreed to ask parents if they would take part in the study by allowing a tape-recording to be made of their conversations together. The point of the study is to see if improvements can be made for babies, children and their families in the future.

Whatever you decided will not affect the care given to you and your child and it won't change anything that happened today. There will be no extra people in the room because of the research and you will not be asked to answer any questions. You may be invited to give your views on what has happened to you in a few months, but you do not need to decide about that now. If at any time you change your mind you can ask for the tape-recorder to be switched off or for the tape to be wiped clean. If you are happy to take part, the tape will be sent straight to the research team and will not be played to anyone else at any time.

Please sign below to say whether or not you want to agree to the tape recording. If you do decide to take part your doctor will give you a copy of a letter with more details about the study. You will be able to take it away and read it at a more convenient time.

Thank you for taking the time to read this.

Consultant	Claire Snowdon	Diana Elbourne	Jo Garcia
Neonatal Unit	Cambridge University	London University	Oxford University

Study of communication in hospital

I/We have decided that the doctor

- ☐ can make a tape-recording of our conversation
- ☐ cannot make a tape-recording of our conversation

Signed ..... Date .....

Signed ..... Date .....

UNIVERSITY OF CAMBRIDGE

CENTRE FOR FAMILY RESEARCH

Social and Political Sciences Faculty
Free School Lane, Cambridge CB2 3RF

Office: (01223) – 334510
Fax No: (01223) – 330574
E-mail: cfr-admin@lists.cam.ac.uk
Personal Line: (01223) – 33

Director: Professor Martin Richards

Thank you for allowing your doctor to tape record your conversation. It will make a very important contribution to our study. This letter is to give you some more details.

We are looking at how parents feel about clinical trials. Taping the conversations that doctors and parents have about a trial is the most important part of the study. It tells us what parents and doctors say to each other at this time. We will be taping about 150 conversations. We will also ask everyone in the study if they would fill in a short questionnaire to give us some basic information. That is all most of the people in the study will be asked to do.

In a few months, parents of around 40 babies will be invited to talk to the researcher, Claire Snowdon, about their experiences. These talks will include some parents who decided that they would agree that their baby would join the trial, and some who decided that they would not. The talks will be arranged at a time and a place (usually at home) which is convenient and comfortable for the parents. We are not asking you to decide about whether you want to talk to Claire now but if you feel strongly that you do NOT want us to contact you, please say so on the attached slip. If you send it to us in the prepaid envelope we will take your name off the list of people who might be invited to talk with Claire.

The study will also include some interviews with doctors and nurses who are involved in the INNOVO Trial. They will not be asked to talk about you or any other individuals. The interviews with staff will look at what they think about being involved in clinical trials.

The tape recordings made for the study will be treated as completely confidential. They will not be played to anyone outside the research team else. If you are unhappy about the recording that has been made of your conversation, for any reason, tell us or your doctor and it will be destroyed (** if possible) and you will not be contacted again about the study. Your decision will not affect the care given to you and your baby.

If you have any questions about the study you could talk to your doctor or you can contact Claire Snowdon. She will be happy to answer your

questions. Her address is at the top of this letter or you can call her directly on 01223 334508.

This study will give important information about how parents, doctors and nurses feel about clinical trials. It will be used to guide doctors about how to talk to parents in the future when they ask if they would take part in a trial. We very much appreciate the contribution that you have already made to the study. Thank you for helping at this difficult time.

Clinician's name	Claire Snowdon	Diana Elbourne	Jo Garcia
Title	Research Fellow	Senior Lecturer	Social Scientist
Neonatal Unit	Cambridge Univ.	London Univ.	Oxford Univ.

Study of communication in hospital and attitudes to clinical trials

I/We have decided that we would prefer you to take our name from the list of parents who could be invited to be interviewed. This means that we will have no more contact with the study team.

Signed ..... Date .....

Signed ..... Date .....

Appendix F - Parental information sheet for the CANDA Trial

Comparative trial between Curosurf and ALEC in the treatment of respiratory syndrome in preterm infants.

We would like to ask for your help in a research trial that is currently in progress on the Special Care Baby Unit. This is part of the on-going research into problems encountered by babies who are born prematurely.

Babies who are born more than 10 weeks prematurely often have problems with their lungs due to a lack of surfactant. Normally surfactant is produced in the lungs. It helps keep the air spaces open making it easier to breathe. A baby born prematurely may not have time to "switch on" its production of surfactant. To overcome this it has become standard practice to administer replacement surfactant and this has been shown in many trials to be effective.

We are currently looking at two different surfactants. The first, ***ALEC*** (Artificial Lung Expanding Compound), is a man-made artificial surfactant and has been used in [this hospital] and other centres for several years. The second, ***Curosurf,*** is a naturally occurring surfactant and is derived from pig lung. This has also been used in many Special Care Units for some time.

Both artificial and natural surfactants have been shown to work in premature babies. Natural surfactants actually work faster but whether this means they are better is unclear. Artificial surfactants on the other hand are cheaper and may be safer, not being derived from animals. The only way to be sure about this is to perform trials making a randomised decision about which surfactant a baby will receive, and then comparing the two groups of babies

If you decide you would like to help us by allowing us to enrol your baby in this trial your baby will be randomised to receive either **ALEC** or **Curosurf** replacement surfactant. The only difference in treatment your baby would receive as part of the trial is the randomisation to one or other surfactant. The only difference in treatment your baby would receive as part of the trial is the randomisation to one or other surfactant. In addition we would like to analyse the secretions from your baby's breathing tubes. **It is routine care for babies to have their breathing tubes cleared of secretions while they are on the ventilator to prevent blockage. Instead of throwing these secretions away, as is normally the case, we will keep them and analyse them. This does not entail any additional tests on your baby and collection will only be done as part of their normal routine care. An additional information sheet explaining this in greater detail is available, please ask if you would like to see this.**

We hope to recruit 500 babies into this trial here and in other hospitals. The first dose of either surfactant is given as soon as possible after birth, preferably within two hours in order to gain maximum benefit.

PLEASE NOTE:

- **Participation in this trial is entirely voluntary. Your baby will continue to receive normal neonatal care. Should you decide not to participate, and in this case the standard treatment would be to use ALEC. The quality of care will not be affected by your decision.**
- **You may withdraw your baby from the trial at any time without giving a reason and without it affecting the care your baby receives. Please tell the doctor or nurse looking after you or your baby.**

If you decide to allow us to enrol your baby into this study we would be happy to explain any queries you may have regarding his or her treatment.

Thank you very much for your help.

(Dr's name)
RESEARCH REGISTRAR
PAEDIATRICIAN

(Dr's name)
CONSULTANT

Comparative trial between Curosurf and ALEC in the treatment of respiratory syndrome in preterm infants.

I, ... of .....

....

.....

have read the information sheet regarding this trial and discussed its contents

with Dr .....

I agree to participate with my baby/babies, ...

I understand that they may receive either surfactant and it is not know which surfactant will be given in advance. **I also understand secretions from routine cares of my baby/babies will be collected and analysed, but that this will not entail additional tests on my baby/babies.**

I understand that I may withdraw my consent at any time without having to give a reason. In the event that I withdraw my consent, my decision to do so will not affect the care afforded to my baby.

Signed: ..... Date: .....

Witnessed by: ..... Date: .....

(Member of staff explaining the trial)

Appendix G - Parental information sheet for the INNOVO Trial

If you DO NOT want your baby to take part: You should feel under no pressure for your baby to take part in this study. If you do not want her to take part, please feel absolutely free to say so. If you choose to keep your baby out of the study, then she will stay on the ventilator and still get excellent care from her team of doctors and nurses.

If you DO want your baby to take part: If you do decide that you would like your baby to take part in the study, the first step will be to find out which of the two treatments she will be offered. It is important to start the treatment soon.

You are free to withdraw from the study at any time. Your baby will still receive excellent care.

THANK YOU

Do you need more information?

- If you would like more information about our study, or about parent support groups, please ask your doctor or nurse.

- If you would like a summary of the study report when it is published please ask your doctor or nurse for a form. We shall not know the results of the study before the year 2003.

Arrangements for compensation

There are no special arrangements for compensation as is sometimes the case for trials supported by drug companies. The arrangements follow the normal procedures for any hospital.

The INNOVO Trial

Neonatal ventilation with **I**nhaled **N**itric **O**xide versus **V**entilatory support with**O**ut inhaled nitric oxide for severe respiratory failure:

a multicentre randomized controlled trial

Funded by the Medical Research Council

Information for parents

Thank you for reading this leaflet at such a difficult time. We are giving it to you now so that we can tell you about INNOVO, and ask if you would agree for your baby to take part in this study.

I am sure you will have realised from talking with the doctors and nurses that your baby has breathing problems. There are many ways of helping babies who are born with these problems. Some ways may be better than others. This study is designed to look at a way of caring for babies on ventilators with problems like this. We hope that the results will help other babies in the future.

What are we trying to find out?

The study will find out whether or not adding a gas, nitric oxide to other ventilator gases allows babies like yours to breathe more easily. It will also find out if they get well sooner, and are healthier, or whether they would do better without the nitric oxide.

Neither you nor your doctor will be able to choose whether or not your baby receives nitric oxide. Instead this decision depends on chance, rather like the toss of a coin. This is important so that nitric oxide can be tested fairly. At this time there is not enough research to know if it is better or worse than the usual ventilatory gases alone.

What is known about using nitric oxide for babies like yours?

Nitric oxide is present naturally in small amounts in the air and in our bodies. A lot of research on using it for patients has been carried out in laboratories, on animals, and on human beings in all age groups. For some babies with breathing problems, giving nitric oxide could help the lungs make better use of the oxygen which the baby is taking in. More research is needed to see if this really helps the baby or whether there may be drawbacks or severe side effects. One of these could be lung irritation which might mean that the lungs recover more slowly.

Will other babies take part?

We should like many babies to take part in this Medical Research Council funded study from hospitals in the UK and overseas. We will then find out whether the benefits of adding nitric oxide to the ventilator gases are greater than the possible drawbacks.

What would your baby being in the study involve?

If you decide to take part, then the next stage is to find out which of the two treatments your baby will be offered.

- Half the babies in the trial will be treated with a ventilator without nitric oxide added.
- The other half will be treated with a ventilator with nitric oxide added.
-

If you would like your baby to take part in the study

The doctor will telephone the trial centre with some details about your baby, and will be told which of the two treatments has been drawn (by chance). The doctor will, of course, tell you straightaway which treatment your baby will get.

While your baby is having support from the ventilator, samples of fluid taken from the tube leading from the ventilator to your baby's air passages may be analysed by members of the study team. Otherwise her care will not be affected in any other way.

We are not only interested in your baby while she is in hospital. Nitric oxide may have affected the lungs, in either a positive or negative way, when your baby is older. So, after she leaves hospital, you will be contacted at home by a member of the study team to ask about her health. With your permission we will also be letting your GP know that your baby is taking part in the study. Arrangements will be made then to examine your baby again around the time of her first birthday. Members of the study team will keep in contact with you until your baby is about five. Information will also be taken from her medical records. Of course, all information that we collect will be treated in the strictest confidence.

Your decision

You may want to think a bit more about whether to take part in this study and discuss it with your partner or someone else. You may want to talk again about the study with the doctors and nurses.

Appendix H – Literature relating to interviews with neonatologists

1 Invitation to participate in the study

2 Interview schedule

3 Brief questionnaire

UNIVERSITY OF CAMBRIDGE

CENTRE FOR FAMILY RESEARCH

Social and Political Sciences Faculty
Free School Lane, Cambridge CB2 3RF

Office: (01223) – 334510
Fax No: (01223) – 330574
E-mail: cfr-admin@lists.cam.ac.uk
Personal Line: (01223) – 33

Director: Professor Martin Richards

Dear Dr .....

Re: Study of communication in hospitals and attitudes to clinical trials

I am writing to you with regard to some research which involves staff previously or currently connected to the Neonatal Intensive Care Unit at the .....Hospital. The research is funded by the Nuffield Foundation and is being carried out by researchers at the Universities of Cambridge, London and Oxford. We are looking at the views of those involved in a neonatal randomized controlled trial, the INNOVO Trial. The study involves interviews with parents, medical staff and nursing staff and aims to examine trial participation from these three perspectives. As you were involved in the recruitment of at least one of the babies in the INNOVO Trial we would like to ask you to take part in the research.

The staff interviews examine the issues that involvement with trials raises for individuals. They will explore staff opinion about appropriate methods of giving information and will highlight any specific features of individual trials which may raise difficulties. You would be asked after the interview to complete a one page demographic questionnaire.

There is a reply slip and prepaid envelope with this letter which you could use if you want to let me know whether or not you are interested in taking part in the study. I plan to call you some time in the next week or so unless I hear from you that you would prefer not to take part. In the meantime if you wish to know more about the research you could call me on the above number or email me at Cambridge (cms1000@cam.ac.uk). I would be happy to answer any queries you might have.

Yours sincerely

Claire Snowdon
Research Fellow

Schedule and notes for interviews with staff - INNOVO Trial

General guidelines

- If possible the tape recorder should be placed between you, away from an obvious source of noise.
- Try to keep your own speech to a reasonable minimum. You obviously need to talk to staff to engage in a comfortable conversation, but you don't want to inhibit their views in any way, and everything you say, including encouraging them in a line of thought with 'uhuh', will be transcribed. Unless it looks or feels artificial I usually try to nod or sometimes wait a little, in which case interviewees will often continue or expand on their thoughts quite naturally.

Before the interview starts

Position of the interviewer

There are key points to make about the position of the interviewer. I usually make it clear that I am not a member of the trial team or linked in any way to any of the hospitals involved in the trial. I am employed to look at the views of the people involved and because I am an outsider, it does not matter to me what the staff have to say about the trial. Specific comments they make will not be reported back to their colleagues. Any information used from the interview in a report would not use their real names.

The study

The study involves any member of staff involved in the INNOVO or CANDA trials in actively recruiting centres, and parents of up to 50 babies who had breathing difficulties after birth who were asked if they would consider joining one of the trials.

The interview

The schedule outlined below is a guide to the areas I need staff to talk about. Some of them will cover these areas quite naturally with little prompting so the questions may not even be necessary. They are there not to suggest that you should stick rigidly to them, but to help you to know whether or not the interview has elicited the information needed. Sometimes you may need to allow staff to finish a thread of thought and then take them back to an earlier area which has been missed. Sometimes it will be clear that there is an important issue for individuals which is not part of the schedule, eg circumstances of a case which is particularly memorable or their own circumstances at the time. Although these are not part of the schedule they are important as they give a context to the rest of the information. It is therefore important to strike a balance between accessing information and

giving staff the opportunity to talk about things that are meaningful for them, and not allowing the interview to deviate excessively into unrelated areas. The length of time that the interview will take depends mainly on how much the staff have to say. If they want to set a time by which it should it should end that is fine. It is likely that the staff interviews will be shorter than the parental interviews, especially if they are seen at work. There may be interruptions from bleeps or colleagues needing their assistance. With their permission the conversation will be tape-recorded. If permission is not given (this has not yet occurred in any previous interview for the parents in associated studies) then it will be necessary to take some notes at the time and after the interview. It would clearly not be possible to note down all answers in full so it must be accepted that data will be lost in these circumstances. Staff who agree to a recording should be told that they may ask for the tape to be stopped at any time, either for a break or to end the interview. If there are any questions that they do not wish to answer then that is fine too.

Questionnaire

A short questionnaire collecting demographic details will be left at them at the end of the interview, with a prepaid envelope. This should be briefly mentioned.

Any questions

It should be checked whether there is anything that the staff want to know about the study, and whether they are happy to proceed.

Introduction

We asked you if you would be interested in taking part in this research as you were involved in recruiting a baby to the INNOVO Trial. Although we are primarily looking at reactions of parents and staff to two neonatal trials, of which the INNOVO Trial is one, some of the questions relate to your views and involvement with trials more generally. We are interested in the issues they have raised for you and what you think about particular aspects of trial methods. If there are any aspects of clinical trials that you would particularly like to raise, feel free to do so. The questions do not require you to give any details of the cases you have been involved with, but if you do choose to give any examples of your experiences, we would safeguard patient confidentiality. We will use pseudonyms in any publications, as we would for you, and would not use obviously identifying details. If there are any questions that you would prefer not to answer, indicate this and we can simply move on.

Section 1

Professional role and neonatology

Firstly we need a little background details about you. There is a short demographic questionnaire for you to complete later, but for now could you briefly tell me:

For current neonatal staff - what your current role is within the neonatal unit?

For registrars on rotation or staff who have moved on - about your role when you worked on the neonatal unit and whether you have any continued role there?

Do you plan to continue/go back to work in neonatology?

Section 2

Involvement with clinical trials

What involvement have you had with clinical trials, both in neonatology and in any other specialty? **NB If the interviewee has experience in trials in other areas, there are questions in Section 3 which cover comparisons between specialties.**

Do you remember when you first recruited a patient to a trial?

How frequently do you currently recruit patients to trials?

To what extent has your involvement been optional or were you obliged to be involved in trials?

How have you found this aspect of your work?

Do you feel that trials in neonatology raise any different issues to those in other specialties?

We are interested in what preparation professionals have had for working in a trial context, and whether you feel there are any particular training needs. For each of several areas we would like to know if you have had any formal training, when, what form the training took and how useful it was.

Have you had any training in:
- clinical trial methods and terminology?
- ethical aspects of clinical trials?
- recruitment to clinical trial?

If no, have you covered any of these issues informally or on your own?

If no to any of the above, how useful would training be?

Section 3

Recruitment and consent in neonatal trials

Recruitment to clinical trials is known to be a difficult area in terms of the process of informing participants to ask for consent, and because of the circumstances involved.

In the past have you felt sufficiently prepared to recruit participants to trials?

How do you feel about your role in the process of recruitment now?

(If the above question is not answered in terms of stress that it might cause for staff) Do you ever find recruitment stressful? **If yes,** for what reasons?

How do you feel about asking parents to consider taking part in research?

Are there any factors which influence your decision whether or not to approach parents of babies who are eligible for a trial?

Some people argue that a problematic aspect of trials for professional is that there are competing demands between the needs of the patient in your care, and the need for information to treat patients in the future.

Has this been an issue for you at all?

We are interested in individual's approaches to giving information to parents when discussing a trial, and what details you think are appropriate or inappropriate.

What information do you usually give to parents about a trial?

(If not covered spontaneously ask the following questions marked # as prompts. Questions marked * are to be asked of all interviewees unless obviously repetitious)

Do you talk to parents about the purpose of a trial? **If yes,** what do you tell them?

Do you talk about the different treatments in the trial? **If yes,** what do you tell them?

* Do you explain the idea of equipoise? **If yes**, how do you go about explaining it? Do you find it difficult at all? How do the parents tend to react? **NB Use the term 'equipoise' to see if it is familiar to staff.**

* If you are describing the current state of knowledge about a treatment, do you give your own views about the treatment. **If yes**, do parents seem to find it helpful?

* Do you find that parents often express a preference for one treatment?

Do you tell them about the trial methods (eg randomization, comparisons of groups)? **If yes,** what do you tell them?

* **If doctors say they do explain randomization,** Do you find this difficult at all? Do the parents seem to find it difficult?

* How do you react to the use of randomization?

* How do parents tend to react?

* Are there any terms or concepts which you think are particularly difficult for doctors to explain or for parents to understand?

Do you tell them about any follow up there might be for the trial?

Do you ever feel that it is inappropriate to give particular pieces of information about a trial?

Are there any terms that you avoid using or areas you avoid discussing?

How realistic do you feel it is for parents to gain an understanding of clinical

trials in this sort of context? **(This question may well have already been covered by earlier answers)**

Do you feel comfortable that you are getting informed consent? Do you think that it is a) possible and b) desirable?

Section 4

Parental decisions

How commonly do you find that parents ask 'What would you do in our situation?'?

How do you respond to this?

Have you thought about what you would do if faced with their situation?

Have you ever had parents decide not to participate? **If yes**, how does that feel?

When parents give consent to participation, how do you then find the process of randomization?

What is it like to go back and tell the parents about the allocation that has been made?

Once the allocation has been made, do you ever think about what it would have be like if a patient were allocated to the alternative arm of a trial?

Do you feel that there are any particular benefits for patients and their families who decide to take part in a trial?

Do you feel that there are any problems or difficulties for them?

Optional question Do you think there is anything that could make the situation easier for patients and their families?

Optional question Do you think there is anything that could make the situation easier for staff?

Section 5

The INNOVO Trial

What has been your involvement in the INNOVO Trial?

What do you think of this particular trial? **(If the interviewee wants**

expansion of the question we are interested in the aims and the conditions set by the trial)

Has this trial raised any particular issues for you? **These two questions are deliberately general to give staff the option of not referring to individual cases.**
Did you have any views about the use of nitric oxide before the trial started? **If yes**, where did these views come from eg personal experience, colleague's experiences, research literature etc

Have your views about nitric oxide changed in any way during the trial? **If yes,** are there particular reasons for that? **If yes,** has this affected your view of the trial?

Do you think that recruitment for the INNOVO Trial is any easier or any more difficult than other neonatal trials?

For technical and practical reasons it was decided that the trial should use no nitric oxide rather than a placebo for the comparison group. Had it been feasible to use a placebo, do you think this would have changed things for a) the staff b) the parents? **If yes,** in what sorts of ways?

Is there anything else you would like to add about the INNOVO Trial

That is all of the questions but is there anything else that you would like to add about trials in general or about the INNOVO Trial?

Study No.

Name
.....

1 Age

2 Sex Male
Female

3 What is your current job title?

.....

4 Who is your current employer?

Hospital
University
Other please give details

.....

.....

5 Please list and date your medical and other relevant qualifications. Include details of membership or fellowship of any of the Royal Colleges.

.....

.....

.....

.....

.....

.....

.....

.....

Thank you for your help. If there is anything you would like to add to what you said in the interview, please use this space and the blank page overleaf.

Appendix I – Literature relating to interviews with parents

1. Invitation to participate in the study – parents of surviving babies
2. Invitation to participate in the study – bereaved parents
3. Consent form
4. Interview schedule for parents of surviving babies[74]
5. Insert to indicate amendment to interview schedule for bereaved parents
6. Post-interview questionnaire

[74] The interview schedule which was used to guide the assistant interviewers is included in order to give an impression of the aims and the style of the interviews.

UNIVERSITY OF CAMBRIDGE

CENTRE FOR FAMILY RESEARCH

Social and Political Sciences Faculty
Free School Lane, Cambridge CB2 3RF

Office: (01223) – 334510
Fax No: (01223) – 330574
E-mail: cfr-admin@lists.cam.ac.uk
Personal Line: (01223) – 33

Director: Professor Martin Richards

Dear parents

Study of communication in hospital and attitudes to taking part in a clinical trial

Some time ago when ..... was born, you were asked by a doctor if you would consider allowing him to take part in a clinical trial. The trial was called the CANDA Trial and compared two different types of surfactant. We are aware that the issue of joining the trial came at a particularly stressful time for you. In order to make things easier in the future for parents of sick babies and for the staff who look after them, we are asking parents like yourself to tell us how you felt about your experiences.

We would like to hear what you have to say about your experiences when Joe was in hospital, and what it was like to make a decision about the trial. We are also interested in what you think about the trial now.

The project will look at the views of everyone involved - the parents, the doctors and the nurses. By collecting everyone's views we should build up a picture of the whole situation.

The project is being carried out by researchers from three universities with the help of the Neonatal Unit at ..... If you decide to join the study, one of the researchers, Claire Snowdon, will arrange to visit you. Most people will probably be visited in their own homes but if you would prefer to see Claire somewhere else that can be arranged. We would like to hear the views of both parents where possible. If you would both like to take part you can choose to see Claire together or at a separate time. If only one of you would like to take part, that is not a problem. Claire would still be interested to come and meet one of you.

Claire is based at the Centre for Family Research at Cambridge University. She is not part of the CANDA Trial team and will not pass on any identifying information that you might give him to the medical staff involved. Anything that you say will be treated in confidence and names, or other way of identifying you or ....., would be changed in any reports that are written. The doctors and nurses who are involved in the CANDA Trial who take part in the project will not be asked to talk about you or any other individuals. The interviews with staff will look at what they think about being involved in clinical trials.

There is a reply slip with this letter. Please fill it in to say whether or not you would like to take part in this study. There is a prepaid envelope included so you will not need a stamp.

If you have any questions about the study you could talk to your doctor or you can contact Claire. She will be happy to answer your questions. You could use one of the prepaid envelopes or you can call him directly on 01223 334508.

Thank you for taking the time to read this letter.

Yours sincerely

Dr [name]	Claire Snowdon	Diana Elbourne	Jo Garcia
[Title]	Research Fellow	Professor	Social Scientist
[Hospital]	Cambridge University	London University	Oxford University

Study of communication in hospital and attitudes to clinical trials

Please tick a box ☐

☐ I/we do wish to take part in this study

Name (s) .....

Address .....

.....

.....

.....

My telephone number is .....

The best times to telephone are .....

.....

☐ I do **NOT** want to take part in this study

Please feel free to use this space for any comments you might have.

UNIVERSITY OF CAMBRIDGE

CENTRE FOR FAMILY RESEARCH

Social and Political Sciences Faculty
Free School Lane, Cambridge CB2 3RF

Office: (01223) – 334510
Fax No: (01223) – 330574
E-mail: cfr-admin@lists.cam.ac.uk
Personal Line: (01223) – 33

Director: Professor Martin Richards

Dear

Re: Study of communication in hospital and attitudes to taking part in clinical trials

I gather that a few months ago you had an appointment with Dr ..... at ..... Hospital. Dr ..... asked if we could write to you about a research project. Thank you for reading this letter at a difficult time.

As Dr ..... explained, the project involves parents who were asked by a doctor at ..... Hospital if they would consider allowing their baby to take part in a clinical trial. The trial was called the INNOVO Trial. We are aware that the issue of joining the trial came at a particularly stressful time for you. In order to make things easier in the future for parents of sick babies and for the staff who look after them, we are asking parents like yourself to tell us how you felt about your experiences.

We would like to hear what you have to say about your experiences, and what it was like to make a decision about the trial. We are also interested in what you think about the trial now.

The project will look at the views of everyone involved - the parents, the doctors and the nurses. By collecting everyone's views we should build up a picture of the whole situation.

The project is being carried out by researchers from three universities with the help of ..... Hospital. If you decide to join the study, one of the researchers, Claire Snowdon, will arrange to visit you. Most people will probably be visited in their own homes but if you would prefer to see Claire somewhere else that can be arranged. We would like to hear the views of both of you if possible. If you would both like to take part you can choose to see Claire together or at a separate time. If only one of you would like to take part, that is not a problem. Claire would still be interested to come and meet one of you.

Claire is based at the Centre for Family Research at Cambridge University. She is not part of the INNOVO Trial team and will not pass on any identifying information that you might give her to the medical staff involved. Anything that you say will be treated in confidence and names, or other way of identifying

you or your baby would be changed in any reports that are written. The doctors and nurses who are involved in the INNOVO Trial who take part in the project will not be asked to talk about you or any other individuals. The interviews with staff will look at what they think about being involved in clinical trials.

There is a reply slip with this letter. Please fill it in to say whether or not you would like to take part in this study. A prepaid envelope is included so you will not need a stamp.

If you have any questions about the study you could talk to Dr ..... or you can contact Claire. She will be happy to answer your questions. You could use one of the prepaid envelopes or you can call her directly on 01223 334508.

Thank you for taking the time to read this letter.

Yours sincerely

Claire Snowdon	Diana Elbourne	Jo Garcia
Research Fellow	Professor	Social Scientist
Cambridge University	London University	Oxford University

Study of communication in hospital and attitudes to clinical trials

Please tick a box ☐

☐ I/we do wish to take part in this study

Name (s) .....

Address .....

.....

.....

.....

My telephone number is .....

The best times to telephone are .....

.....

☐ I do **NOT** want to take part in this study

Please feel free to use this space for any comments you might have.

Schedule and notes for interviews with parents of surviving babies - INNOVO Trial

General guidelines

- Most people offer some form of hospitality, tea or coffee and sometimes food. I always accept something as it gives some time before the interview starts to break the ice and to talk about something other than the interview. I try as far as is realistically possible to keep off topics related to the research until we sit down to start.

- If possible the tape recorder should be placed between you, away from an obvious source of noise such as a TV. This is not always possible and if the TV is left on I do not ask parents to turn it off. Often it is being used as a means of keeping children amused, or it is just left on out of habit. It would seem rude to ask them to change this. If they ask if it is ok to leave it on, I would then feel able to ask for it to be turned down a little or for the tape recorder to be placed on something closer to us, such as on a coffee table, or even raised on books on a coffee table.

- Try to keep your own speech to a reasonable minimum. You obviously need to talk to parents to engage in a comfortable conversation, but you don't want to inhibit their views in any way, and everything you say, including encouraging them in a line of thought with ''uhuh'', will be transcribed. Unless it looks or feels artificial I usually try to nod or sometimes wait a little, in which case parents will often continue or expand on their thoughts quite naturally.

- Interviewing couples can be awkward as the opinions given by one can be taken to represent the views of the other. Whilst this is the case it is often worth trying to pull out the views of both parents. Even where someone looks like they are indicating their agreement through their body language, they may place a different emphasis on some aspect. Their views are worth having as then they can be coded in their own right. Try to pull both partners in, either by

asking for both of their views in turn, or observing that they seem to agree or disagree eg pointing out ''You were nodding'', ''You were shaking your head'' etc or more explicitly asking when their partner has made a statement ''How do you feel about that''. This is less directive than something like ''Is that your feeling too?'' or ''Do you feel the same?''.

- Use the terminology that the parents use themselves, but beware of assuming that use of a term means that the term is clearly understood. I have fallen into this trap before and then had to go back over ground to work out exactly what the parents did mean by ''randomisation''. Try not to offer any new terms to parents before they use them themselves.

- Sometimes parents ask for information. The circumstances of each request will differ so there are no hard and fast rules about how much information to give and when to give it. If the parents need more information in order to answer your question then clearly they should be given it. An important part of the interview is to uncover what the parents know about the trial. If the information they request will change important aspects of the interview, then if possible a way should be found to defer answering the question until an appropriate time, such as after you have elicited their views on that topic, or at the end of the interview. Often the sorts of things that parents want to know can be given in a very balanced way anyway, such as questions about what other parents do or think, with examples of the variety of views that exist. Some questions will be very specific, such as ''Will I be sent information about X?'' and in such cases it might be appropriate to suggest that they contact Ann Truesdale at the INNOVO Trial Office (0171 927 2376).

- If parents get upset, I ask if they would like to end the interview or have a break. If they want to continue but are very upset, judge their degree of comfort with your presence. If they still want to give you the information but are struggling, you can always bring about a break yourself by asking if you can use their bathroom or offering to fetch a glass of water. Once the tape has actually been stopped and you have given them a few minutes, they can then make a decision as to whether they want to continue.

Before the interview starts

Position of the interviewer

There are key points to make about the position of the interviewer. I usually make it clear that I am not a member of the trial team or linked in any way to any of the hospitals involved in the trial. I am employed to look at the views of the people involved and because I am an outsider, it does not matter to me what the parents have to say about the trial or what happened. Specific comments they make about the staff or the hospital will not be reported back to the staff involved in the care of their child. Any information used from the interview in a report would not use their or their child's real names.

The study

The study involves parents of up to 50 babies who had breathing difficulties after birth who were asked if they would consider joining a trial. There are two trials involved in this study - the INNOVO trial which this family were offered and another trial called the CANDA trial which is comparing two types of a drug which is passed into babies' lungs to help them breathe. We will be speaking to parents and the doctors and nurses who ask the parents about these trials. This means that we can find out how the offer of a trial affects different people.

The interview

The length of time that the interview will take depends mainly on how much the parents have to say. If they want to set a time by which it should it should end that is fine. At least one hour should be allowed as a minimum if possible. With their permission the conversation will be tape-recorded. If permission is not given (this has not yet occurred in any previous interview for the associated studies) then it will be necessary to take some notes at the time and after the interview. It would clearly not be possible to note down all answers in full so it must be accepted that data will be lost in these circumstances. Parents who agree to a recording should be told that they may ask for the tape to be stopped at any time, either for a break or to end the

interview. If there are any questions that they do not wish to answer then that is fine too.

Questionnaire

A short questionnaire collecting demographic details and asking how parents felt the interview went will be left at them at the end of the interview, with a prepaid envelope. This should be briefly mentioned.

Any questions

It should be checked whether there is anything that the parents want to know about the study, and whether they are happy to proceed. If during or after the interview they ask for some specific information about the trial, it would be best to refer their query on to Ann Truesdale at the London School of Hygiene and Tropical Medicine (0171 927 2376). If you do give Ann's number to anyone make sure that you contact her to tell he about the sort of query she might receive from the parents.

The interview schedule

The schedule outlined below is a guide to the areas I need parents to talk about. Some of them will cover these areas quite naturally with little prompting so the questions may not even be necessary. They are there not to suggest that you should stick rigidly to them, but to help you to know whether or not the interview has elicited the information needed. Sometimes you may need to allow parents to finish a thread of thought and then take them back to an earlier area which has been missed. It is important that they should tell their story with a chronology that makes sense for them, so unless you find it difficult to move forwards and backwards through the schedule, allow their descriptions to come to a natural conclusion. Sometimes it will be clear that there is an important issue for parents which is not part of the schedule, e.g. a reaction to drugs in labour, or aspects of personal circumstances such as previous reproductive history. Although these are not part of the schedule they are important as they give a context to the rest of the information. It is therefore important to strike a balance between accessing information and giving parents the time they

want to talk about things that are meaningful for them, and not allowing the interview to deviate excessively into unrelated areas.

There are lots of spaces in the schedule for notes. The boxes will help you to think through the purpose of certain questions and contain hints for managing situations which might arise.

Interview Schedule

Section 1

Pregnancy and the birth

What was your pregnancy with [baby] like?

Could you tell me about the birth?

If the baby was born prematurely, there will be issues to briefly explore with parents. This will vary according to circumstances - some women may have had a history of premature birth and for others it will have been a complete shock. Try to gain some sense of their reactions to labour and the process, if relevant, of trying to stop labour.

Some women may have been asked to participate in a trial relating to early labour - antibiotics to stop labour, drugs to mature the babies' lungs if delivered. If parents mentioned that this happened, you will need to get a description of the events and the information they were given, and have a brief discussion of how they felt about that at the time. If relevant you may want to go back to that experience when they later discuss the INNOVO trial, to find out how they felt about the various trials.

Section 2

After the birth

(concentrating on the period before the trial was mentioned)

What happened after [baby] was born?

When did you find out that [baby] had breathing problems?

Were you given any reasons why this happened?

Section 3

Special/Intensive care

Could you tell me about going to see [baby] in special/intensive care for the first time?

What were you told about the treatment s/he was having at that time?

Did you feel that you understood what was happening at that time?

Was s/he on a ventilator?

How did s/he respond to the treatment?

Did you talk to the staff much at that time?

(If yes) Was there a particular member of staff that you preferred to talk to? (It would be helpful to get a name from parents of possible but not essential if it is uncomfortable or seems inappropriate)

What sorts of things did you talk about? (This might elicit information that was given at an early stage about the prognosis they were given for the baby. You will have to judge how comfortable the parents are to talk about this early in the interview and continue or discontinue this thread as appropriate)

Did you have any feelings at the time about what you wanted the doctors to do for your baby? (This is designed to tap feelings of trying to save the baby, whatever the consequences, or feelings that it may not be a good idea to do so - you may need to alter the phrasing to fit the circumstances and the progress/tone of the interview)

Did you have any feelings about what the doctor thought should be done?

What about the nurses?

What was happened to you at the time e.g. post-natal care, sleeping arrangements, employment, travel, care of other children, coping with relatives?

How were each of you coping at that time?

Section 4

Discussion of the trial

Could you tell me about when you were first told about the INNOVO trial?

Who told you about the trial?

When and where did you have this discussion?

Who was present?

Do you remember what you were told about [baby's] condition then?

Do you remember what you were told about the trial? (Leave the question as simple as this at first to see if the following areas are covered. If any areas are not covered then use the following questions)

e.g. Were you told - why it was being done?

- what it would involve?

- how [baby's] treatment would be decided?

How did you feel about the trial?

Did you feel that you understood what you were told at that time?

Was there anything in particular that you wanted to know?

What did you think about inhaled nitric oxide as a treatment when you were first told about it?
(Try to work out if the parents had any preferences for INO before randomisation, not the view they hold of it now)

Were you told about any possible benefits?

Were you told about any possible problems? (It is very important to try to get a feel for what the parents' perceptions of INO are, even if it is a simple statement that they don't know or can't remember. If you cannot get an answer to this question here, try again by a roundabout route later, possibly when they are asked about their views on INO when they were deciding about the trial)

Did you have any feelings about the fact that [baby] would be taking part in research? (Be careful here as some parents may be unclear on this aspect of events)

How did you feel about the person who explained the trial to you?

What do you think it was like for them to talk to you about this?

Did you feel at that time that s/he had any views on what you should do?

Was there anyone else present when you talked to the doctor about the trial?

(If yes) - How did you feel about that person being there?
- Did you talk to that person at all after the doctor left?
- Was it helpful at all?

Was there anything that could have been done at the time to make things a little easier?

Section 5

The decision

If it is at all possible it would be very helpful to know what the parents views were at the time of decision-making, and now, on the issue of survival. Some may be of the view that it was important to save the life of their baby, whatever the future might hold; others may feel ambivalent about this. It may well be that such views are given spontaneously in the course of the interview, or they may be given with some prompting. For some parents however it would be an inappropriate line of questioning. It is a difficult area so tread carefully and take your signals from what the parents have to say.

Were you left alone to discuss what to do?

How much time did you have to make a decision?

Did you talk about inhaled nitric oxide then?

Did you think about the trial then?

(If the previous question does not draw out views on randomisation) Did you talk about the way the treatment would be decided?

Did these things (INO, the trial, the treatment decision), affect your decision at all?

Did you discuss what to do with anyone else e.g other staff, family or friends?

(If not) Would you have liked to have done that?

Do you feel that you were influenced by the opinions of anyone else at that time?

(If yes) Who?

Did you feel under pressure in any way?

Did you feel that you had enough information to make up your mind?

Did you have any differences of opinion about what to do?

How long did it take you to decide?

In the end, how easy or difficult was the decision?

When you gave your consent, how well would you say you understood the situation?

How sure of your decision were you at that time?

How happy were you afterwards with the decision?

How did it feel to have to make this decision yourselves?

If you were asked to give your reasons for agreeing to join the trial, what would you say they were?

Did you consider not joining the trial?

What was that time like for you?

Section 6

Randomisation

When you told the doctor that you agreed to the trial, what did s/he say?

Did you tell the nursing staff what you had decided?

If yes) What did the nurse say?

What happened next?

Did you understand how the decision was being made at that time? (Some parents may not be aware of randomisation. If you feel that this might be the case, try to pull out how they did feel the decision was made, and on what basis)

At the time did you feel you understood why the decision was made that way?

Be aware that at this point parents may continue to use the term "randomisation" or might say that the decision was made by a computer, but you need to get under the skin of both of those comment, so you have an understanding of what they felt was the nature and basis of the decision. Remember that you do not want to alter their perceptions at all, unless of course they ask you directly for information.

If no, do you feel that you understand now? (Omit these questions for parents who are not aware that randomisation took place)

How long did you have to wait to find out which treatment [baby] was going to have?

It is possible that some parents will feel that they decided that their baby would have INO and the process of randomisation will be unclear. If their baby was allocated to INO then their perception may remain unchanged. If allocated not to have INO, they may have found out why this was the case, - if so explore their reactions to this - or they may have found other ways of explaining why INO was not given e.g. doctors decided it was not necessary or it was not available after all. Be careful to pull out their views and not to correct them.

What was the waiting time like?

How did you feel about how the decision was being made at that time? (Only ask this question if the earlier questions have not elicited a clear reaction)

Do you think that the staff had any views about how the decision was made?

What did the doctor say when s/he told you which treatment [baby] would have?

What was it like for you when you heard?

Section 7

Treatment

What happened next?

Did you feel that you understood what was happening at that time?

How did you feel going back to see [baby]?

How did you feel about the treatment [baby] was having?

How did you feel about the trial at that time?

How did [baby] respond to the treatment s/he was having?

Did you ever think about the trial after the treatment was decided?

What happened during the rest of [baby's] stay in hospital?

Section 8

Discharge from hospital

How old was [baby] when s/he was discharged?

How has s/he been since then?

Section 9

Overview

Doctors and nurses sometimes find it difficult to ask people to take part in this sort of medical research. How did you feel about taking part in research?

What do you think it was like for your doctor to ask you about this?

What do you think it was like for the nurse?

Did any member of staff talk to you about the trial after the event at all?

Now that some time has passed since [baby] had all of those problems, how do you feel about the decision you made?

Have your feelings about the trial changed at all?

Have you ever thought about what it would have been like if [baby] had had inhaled nitric oxide/not had inhaled nitric oxide?

Do you feel that there have been any particular benefits from your decision to take part in the trial?

Do you feel that there have been any problems or difficulties because of your decision?

Some people have said that one reason for some people's decision to take part in a trial can be to help to find out more about a disease or a treatment. When you were deciding what to do, do you think that was part of your decision at all?

Do you think there was anything that could have made the situation easier for you?

Was there anything that made the situation more difficult for you?

The next section involves giving a simple description of single and/or double blind methods in order to find out what parents think about the issue of placebo. Firstly give the brief description and then there are a few questions. In some instances you might wish to check with parents whether the explanation was clear. If necessary go over the description again, before asking for their views. If you come across any parents who are very unclear about the trial e.g. they feel they chose INO and are unaware of randomisation, you may judge that it is inappropriate to ask these questions.

In some trials the people involved are not told which treatment they are going to be given. If this method had been used for the INNOVO Trial, you would not have been told whether your baby was receiving nitric oxide or not.

How do you think that would have been for you? Parents may answer this fully but if necessary you may need to prompt with some or all of the following.

Do you think it would have changed things for you at all?

Would have made things better or worse?

How do you think the doctors and nurses might feel about this situation?

In some trials the doctors and nurses don't know which treatment a patient is receiving as they are not told whether they are giving a drug, like nitric oxide, or a dummy drug, a placebo.

How do you think it would have been for you if the trial had been carried out like this?

What do you think it would have been like for the staff?

If parents want to know more about why this approach might be used, you could give the following information which might lead to an interesting discussion.

There are 2 main reasons why some trials are carried out like this;

- to try to make sure that the results are more reliable. The person who describes the progress of the baby for the trial records might be biased towards one treatment or another and that might affect what they say
- to try and make it easier for the people involved, in case people are disappointed or worried by the treatment groups in the trial.

Use this next question as a way of pulling together what they have said, so that we have a clear yes, no or don't know on this subject <u>from each parent.</u>

So, do you think the trial should have been carried out the way it was, or with one of these different ways?

That is all of the questions but is there anything else that you would like to say about what happened to you, or anything you would like to add about the trial?

Schedule and notes for interviews with bereaved parents - INNOVO Trial[75]

Section 8

What happened next?

What happened during the rest of [baby's] time in hospital?

At the moment we have very little idea of how bereaved parents will react in the interviews and what sorts of views they will express. I suggest that we simply allow the events surrounding the baby's death to be described and see what information is given. Obviously follow up on any lines that seem interesting if they are appropriate, especially if the parents link events to the trial in any way e.g. feeling that they gave their baby the best chance by joining the trial, or regretting their decision. We may need to modify the schedule and make the questions specific once we have done a few interviews.

[75] The interview schedule for the bereaved parents differed little from that of the parents of surviving babies in terms of the formal questions asked and so the whole schedule is not repeated here. It was characterised by a flexible approach with the line of the conversation dictated by the parents, as this extract indicates.

About you

1. How old are you?

..... years

2. Are you working at the moment? Please tick a box ✓

Yes, full-time ☐
Yes. part-time ☐
No ☐

3. If you are working what is your job? If you are not working what is the job that you would usually do?

4. How old were you when you finished full-time education?

.... years

5. Have you gone back into education (full or part-time) as an adult?

Yes ☐ ☞ If 'yes' please give details
No ☐

The Study of Parents Views

1. When you agreed to be interviewed, what did you think?

I wanted to take part ☐
I thought I *should* take part ☐
I wasn't sure ☐
I didn't want to but my partner did ☐

2. Did you have a reason for agreeing to take part?

3. Was there anything that you liked about the interview?

Yes ☐ ☞ If 'yes', please say what.
No ☐
Not sure ☐

4. Was there anything that you disliked about the interview?

Yes ☐ ☞ If 'yes' please say what.
No ☐
Not sure ☐

Feelings about the interview

5. In the interview you were asked about a difficult time. We would like to know how you felt *during the interview*. Here are some words which might describe how you felt at that time. They are just to start you thinking. Please circle any that describe your feelings and add any others if you like. If none describe how you felt please tick the box for 'none of these' and say how you did feel. Did you feel:

calm	important	pleased
sad	worried	relieved
shy	confident	agitated
bored	distressed	numb
angry	embarrassed	nervous
strong	irritated	bored

none of these ☐

Any other words?

2. How did you feel afterwards?

PTO

3. Did you want to stop the interview?

Yes, we stopped for a break ☐
Yes, we stopped altogether ☐
Yes, I would have liked a break ☐
Yes, I would have liked to stop ☐
No, it was fine as it was ☐

4. Did you get to say what you wanted?

Yes ☐
No ☐ ☞ Was there any reason for this?
Not sure ☐

5. Was the interview what you expected?

Yes ☐
No ☐ ☞ If 'no', please say how.
Not sure ☐

6. Would you have liked to have had the interview on your own or with your partner

On my own ☐
Together ☐ } Please say why?
I didn't mind ☐

7. What did you think about the length of time the interview lasted?

8. Did you talk afterwards about the things that were said in the interview?

9. Did you learn anything about each others views, either during or after the interview?

10. Do you think that the interview should have been different in any way?

Thank you for you help. Please use another sheet of paper if you want to say anything more.

Study No. ☐☐☐☐☐

Study of the views of parents involved in the INNOVO Trial

Mother's questionnaire

Confidential

PTO